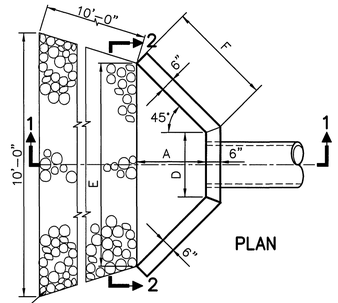

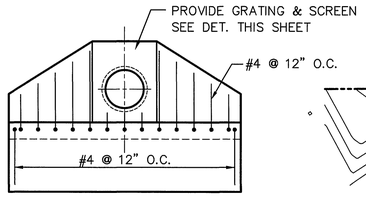

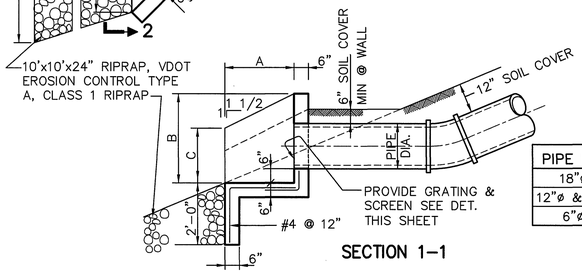

PIPE DIA.	A	B	C	D	E	F
18"ø	36"	36"	12"	30"	8'-6"	4'-3"
12"ø & 8"ø	30"	30"	10"	24"	7'-0"	3'-6"
6"ø	18"	18"	6"	18"	4'-6"	2'-2"

CONCRETE OUTLET HEADWALL DETAILS

NO SCALE

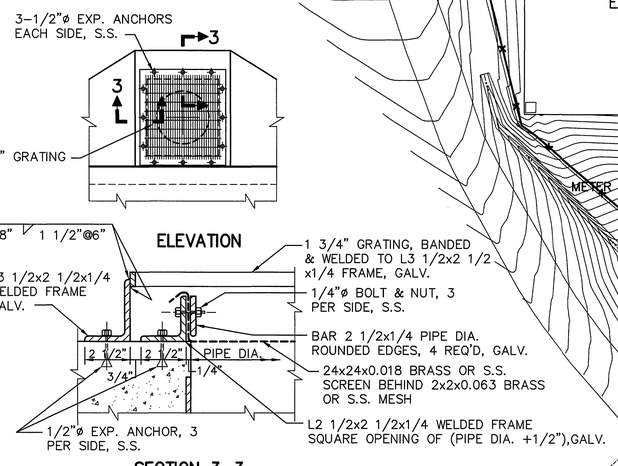

GRATING & SCREEN DETAIL

NO SCALE

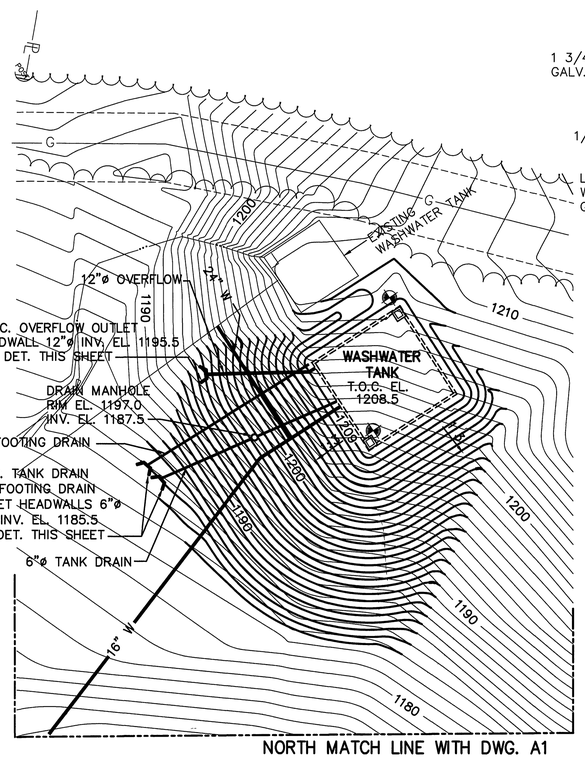

WASHWATER TANK AREA

SCALE: 1"=30'

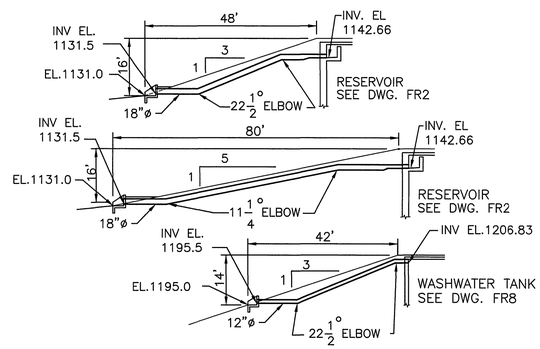

12" DIA & 18" DIA OVERFLOW PIPE PROFILES

SCALE: 1"=20'-0"

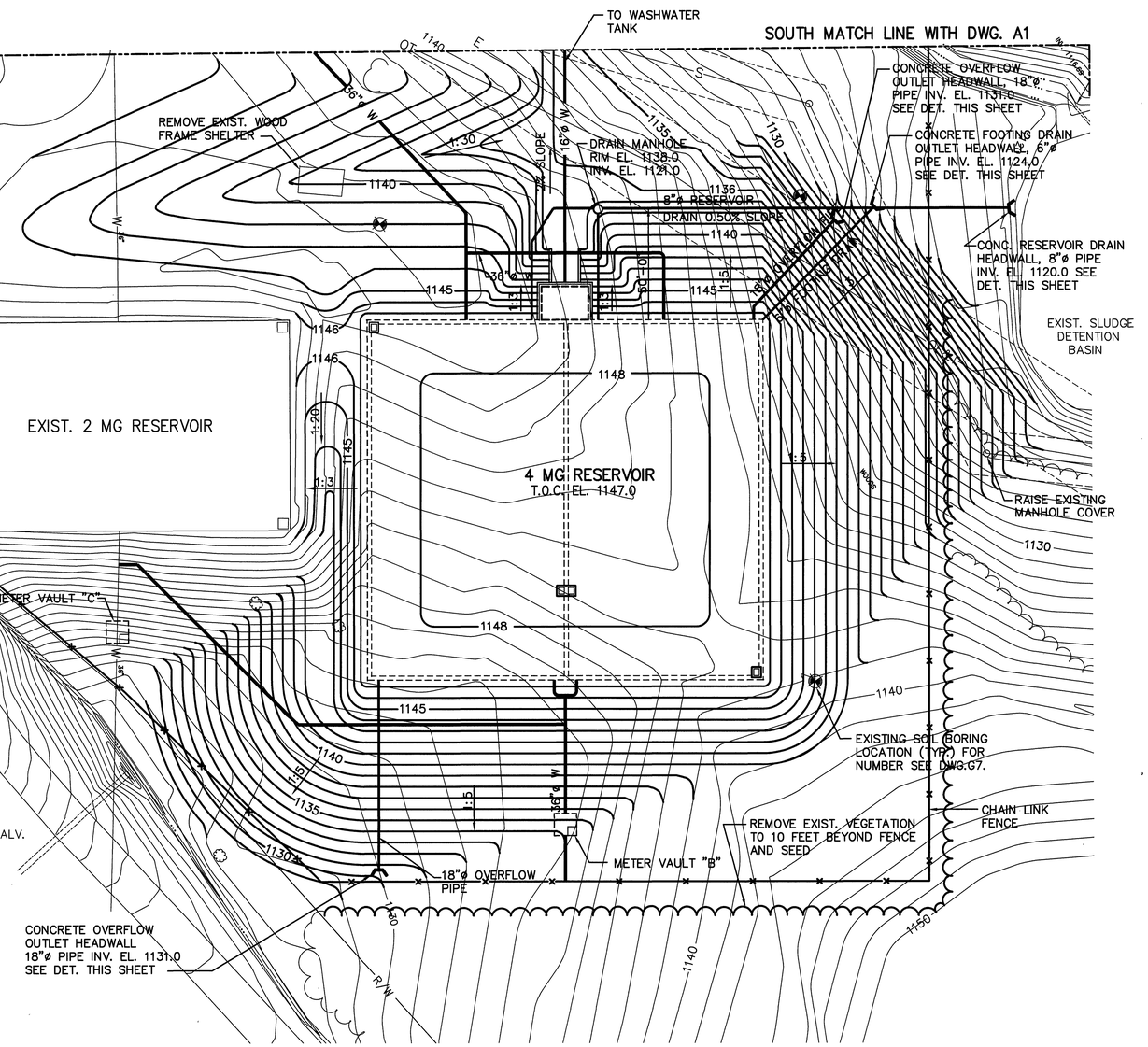
SOUTH MATCH LINE WITH DWG. A1
TO WASHWATER TANK
CONCRETE OVERFLOW OUTLET HEADWALL, 18"ø PIPE INV. EL. 1131.0 SEE DET. THIS SHEET
CONCRETE FOOTING DRAIN OUTLET HEADWALL, 6"ø PIPE INV. EL. 1124.0 SEE DET. THIS SHEET
CONC. RESERVOIR DRAIN HEADWALL, 8"ø PIPE INV. EL. 1120.0 SEE DET. THIS SHEET
EXIST. SLUDGE DETENTION BASIN
RAISE EXISTING MANHOLE COVER
REMOVE EXIST. WOOD FRAME SHELTER
DRAIN MANHOLE RIM EL. 1138.0 INV. EL. 1121.0
8"ø RESERVOIR DRAIN 0.50% SLOPE
PLANTATION ROAD
EXIST. PAVED ROAD
EXIST. 2 MG RESERVOIR
4 MG RESERVOIR T.O.C. EL. 1147.0
METER VAULT "C"
METER VAULT "B"
EXISTING SOIL BORING LOCATION (TYP.) FOR NUMBER SEE DWG.G7.
REMOVE EXIST. VEGETATION TO 10 FEET BEYOND FENCE AND SEED
CHAIN LINK FENCE
18"ø OVERFLOW PIPE
CONCRETE OVERFLOW OUTLET HEADWALL 18"ø PIPE INV. EL. 1131.0 SEE DET. THIS SHEET
36"ø W
16"ø W
1:30
1:5
1:3
1:2.5
1:2.9
1:2.0
1:1.5
1:1.3
1:1.1
1:1.0
1:1.5
1:5
1:3
1:2.5