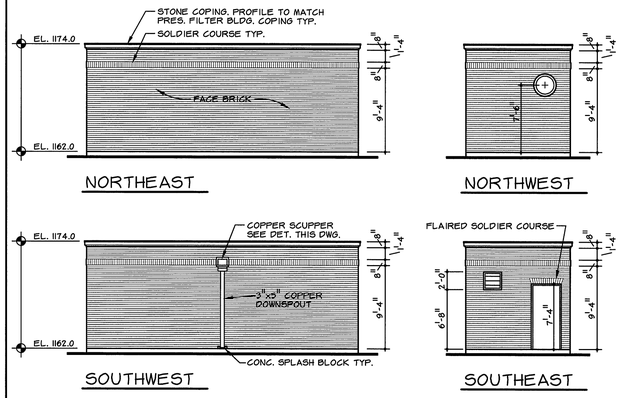


## FLASH MIX BLD. 1 ELEVATIONS

SCALE: 0 4'-0" 8'-0" 16'-0"

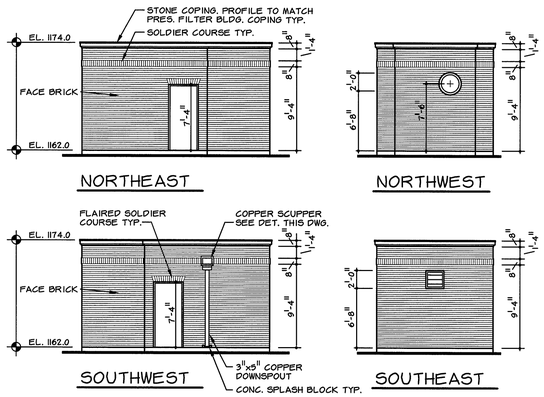


## FLASH MIX BLD. 2 ELEVATIONS

SCALE: 0 4'-0" 8'-0" 16'-0"

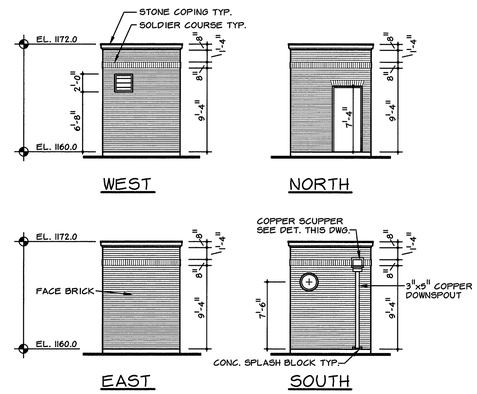


## WASH WATER RATE CONTROLLER VAULT "A" ELEVATIONS

SCALE: 0 4'-0" 8'-0" 16'-0"

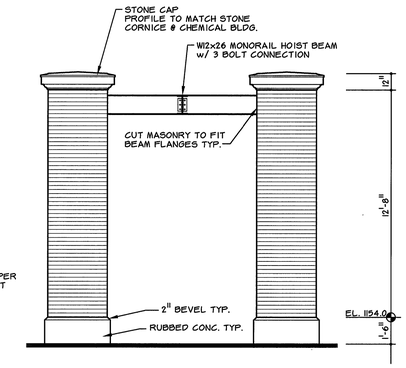


## PIER ELEVATION

SCALE: 0 4'-0" 8'-0"

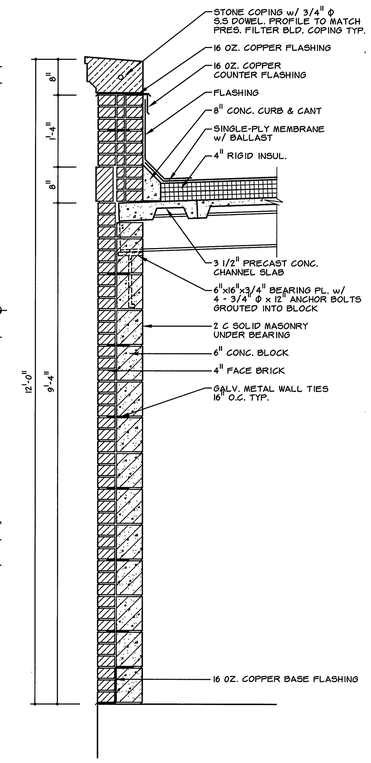


## WALL SECTION 1/A13

SCALE: 0 6" 1'-0" 2'-0" 3'-0"

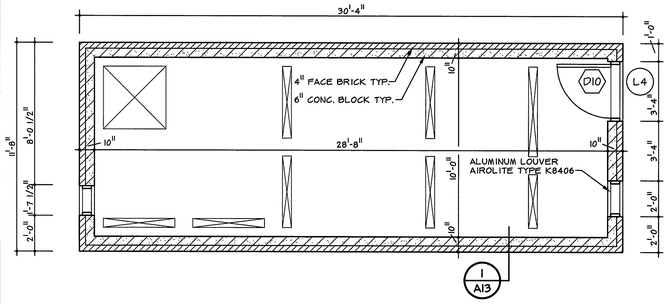


## FLASH MIX BLD. 1 FLOOR PLAN

SCALE: 0 4'-0" 8'-0"

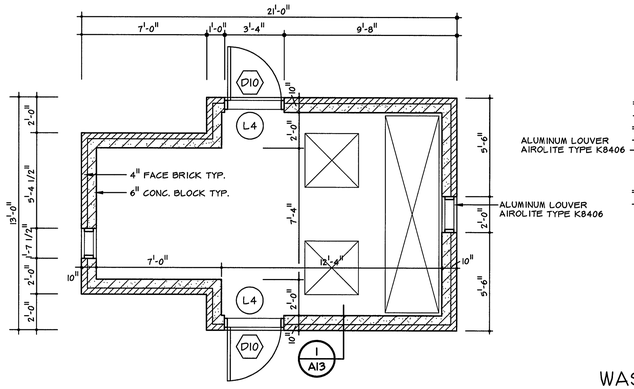


## FLASH MIX BLD. 2 FLOOR PLAN

SCALE: 0 4'-0" 8'-0"

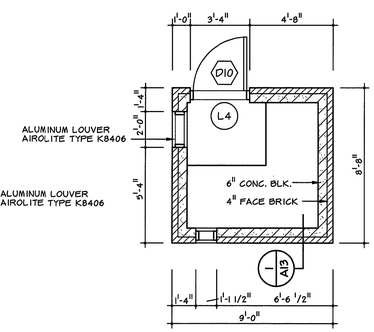


## WASH WATER RATE CONTROLLER VAULT "A" FLOOR PLAN

SCALE: 0 4'-0" 8'-0"

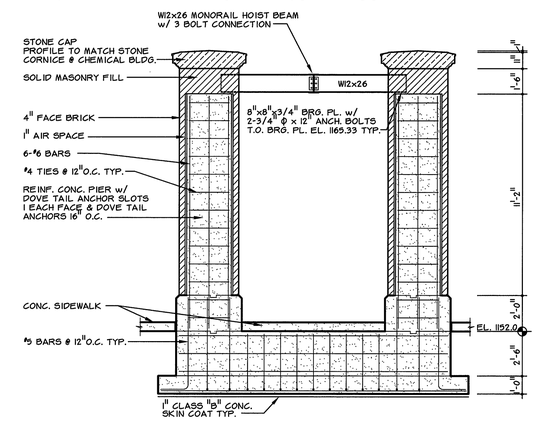


## PIER SECTIONS

SCALE: 0 4'-0" 8'-0"

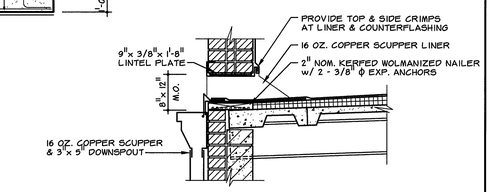


## SCUPPER DETAIL

SCALE: 0 6" 1'-0" 2'-0" 3'-0"

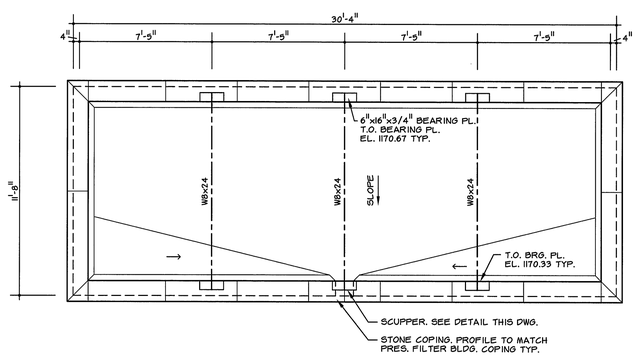


## FLASH MIX BLD. 1 ROOF PLAN

SCALE: 0 4'-0" 8'-0"

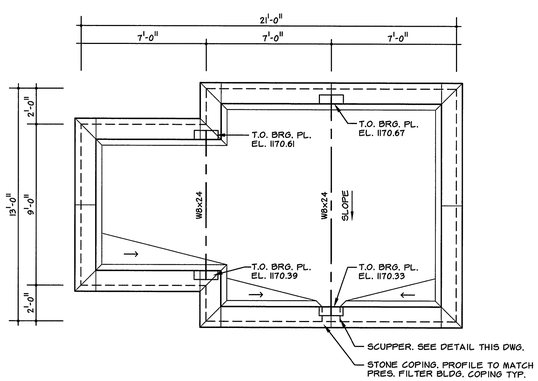


## FLASH MIX BLD. 2 ROOF PLAN

SCALE: 0 4'-0" 8'-0"

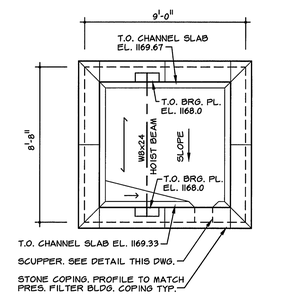


## WASH WATER RATE CONTROLLER VAULT "A" ROOF PLAN

SCALE: 0 4'-0" 8'-0"

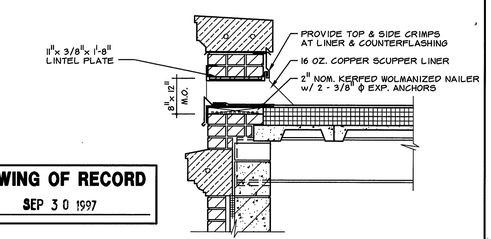


## SCUPPER DETAIL

SCALE: 0 6" 1'-0" 2'-0" 3'-0"

DRAWING OF RECORD
DATE: SEP 30 1997

MATTERN & CRAIG
CONSULTING ENGINEERS • SURVEYORS
ROANOKE VIRGINIA

ALVORD, BURDICK & HOWSON
ENGINEERS CHICAGO

DESIGNED:
DRAWN:
CHECKED:

COMMONWEALTH OF VIRGINIA
YA-TAI LIN
NO. 022786
PROFESSIONAL ENGINEER

| REV. | DATE | DESCRIPTION | BY | APP. |
|---|---|---|---|---|
| | | | | |

CARVINS COVE FILTER PLANT IMPROVEMENTS – PHASE I
ROANOKE, VIRGINIA

TREATMENT PLANT
MISCELLANEOUS ELEVATIONS, PLANS & DETAILS

DATE APRIL 1992
COMM. NO. 9130
SHEET A13

PLAN NO. 6199