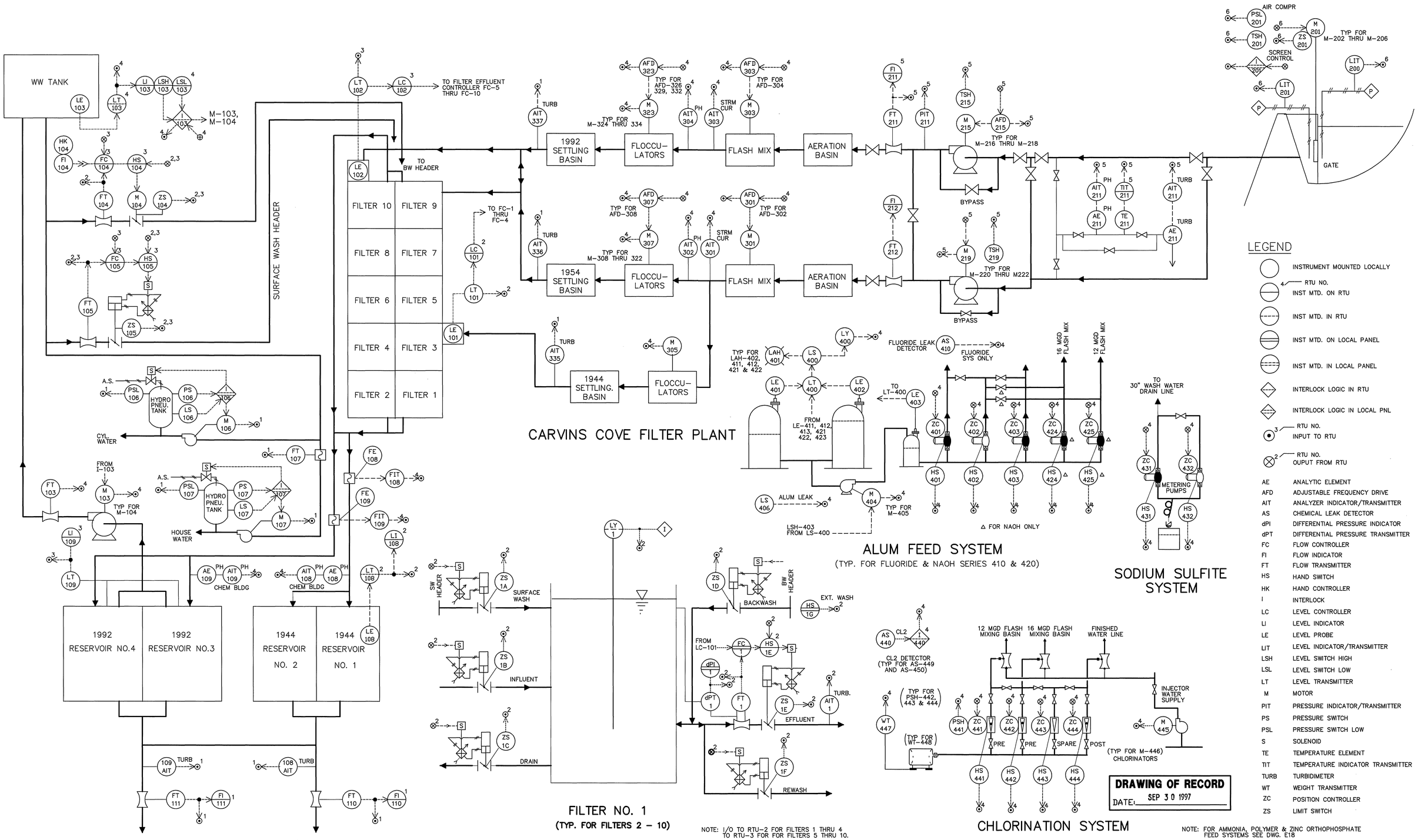

MATTERN & CRAIG
CONSULTING ENGINEERS • SURVEYORS
ROANOKE VIRGINIA

ALVORD, BURDICK & HOWSON
ENGINEERS CHICAGO

DESIGNED: KCC/RRA
DRAWN: KGP
CHECKED: KCC/RRA

COMMONWEALTH OF VIRGINIA
YA-TAI LIN
NO. 022786
PROFESSIONAL ENGINEER

REV.	DATE	DESCRIPTION	BY	APP.

CARVINS COVE FILTER PLANT IMPROVEMENTS – PHASE I

ROANOKE, VIRGINIA

PROCESS INSTRUMENTATION DIAGRAMS

DATE APRIL 1992
COMM. NO. 9130
SHEET E16

PLAN NO. 6199