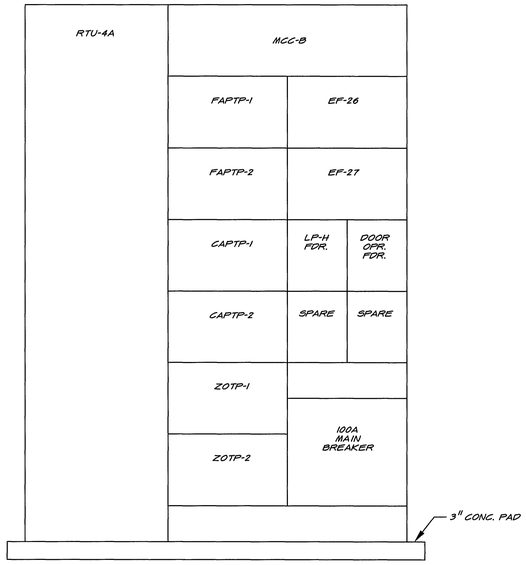

FRONT ELEVATION RTU-4A & MCC-B

SCALE: NONE

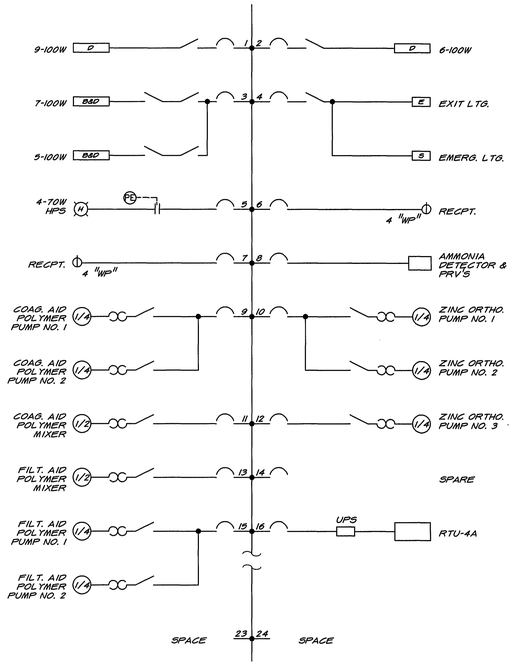

LIGHTING PANEL – H (LP-H)

120/208 VOLTS, 3Ø, 4WIRE, 100A M.B. S/N

NOTES 1. ALL BKRS. IP-20A. UNLESS OTHERWISE NOTED

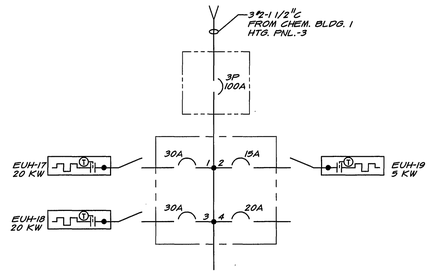

HEATING PANEL – 4 (HP-4)

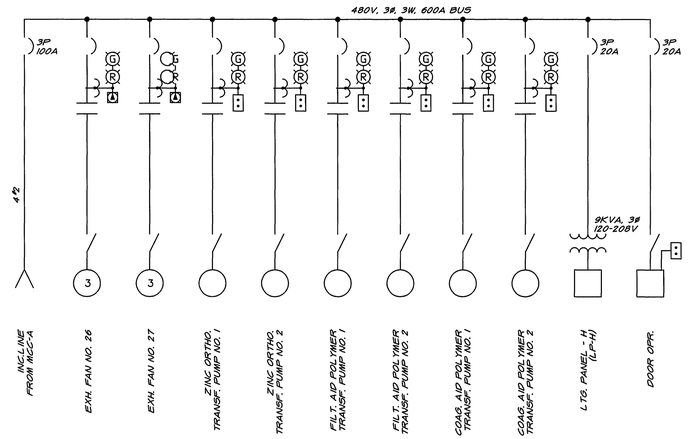

MOTOR CONTROL CENTER – B

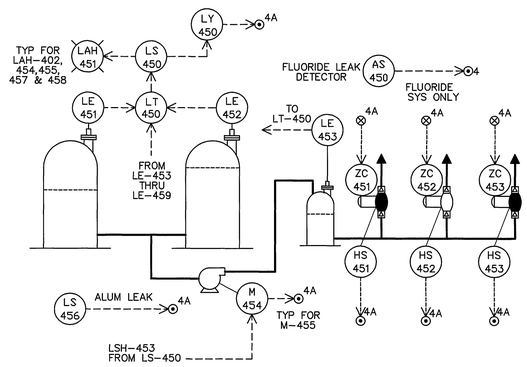

ZINC ORTHOPHOSPHATE FEED SYSTEM

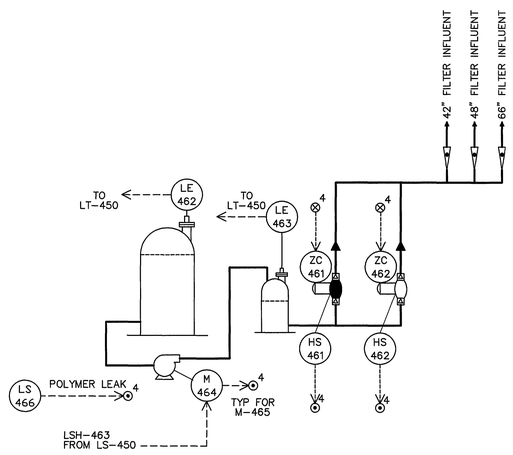

FILTER AID POLYMER FEED SYSTEM

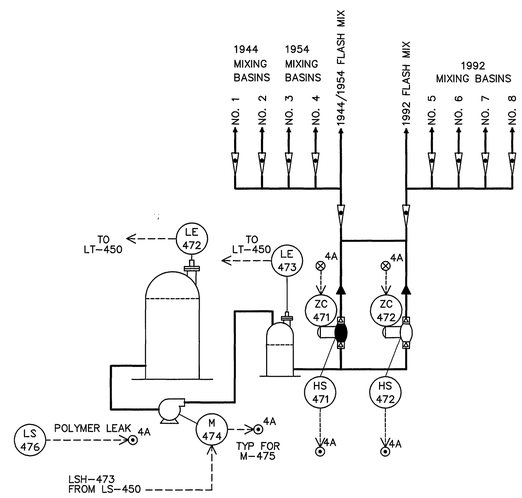

COAGULATION AID POLYMER FEED SYSTEM

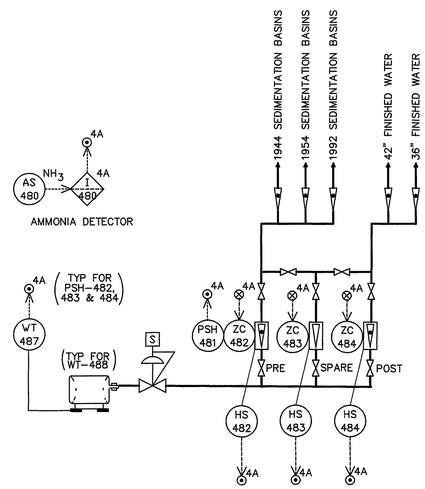

AMMONIA FEED SYSTEM

DRAWING OF RECORD
DATE: SEP 30 1997

MATTERN & CRAIG CONSULTING ENGINEERS • SURVEYORS ROANOKE VIRGINIA	DESIGNED: KCC/RRA		COMMONWEALTH OF VIRGINIA YA-TAI LIN NO. 022786 PROFESSIONAL ENGINEER	REV.	DATE	DESCRIPTION	BY	APP.	CARVINS COVE FILTER PLANT IMPROVEMENTS – PHASE I ROANOKE, VIRGINIA	DATE APRIL 1992
ALVORD, BURDICK & HOWSON ENGINEERS CHICAGO	DRAWN: KGP								CHEMICAL BUILDING 2 ELECTRICAL & INSTRUMENTATION DIAGRAMS	COMM. NO. 9130 SHEET E18
	CHECKED: KCC/RRA									

PLAN NO. 6199