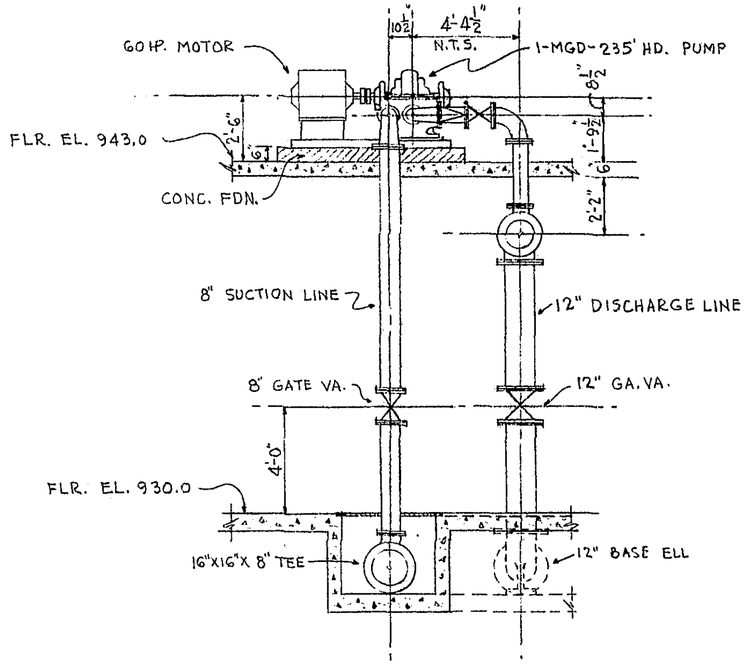

SECTION-"AA"

SCALE-$\frac{1}{4}$"=1'-0"

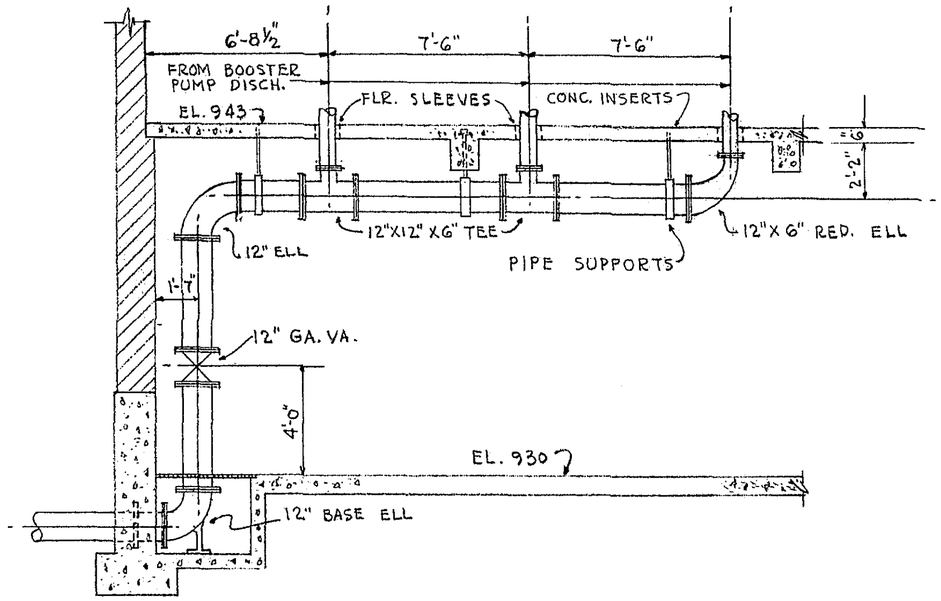

SECTION-"BB"

(BELOW UPPER FLOOR)

SCALE-$\frac{1}{4}$"=1'-0"

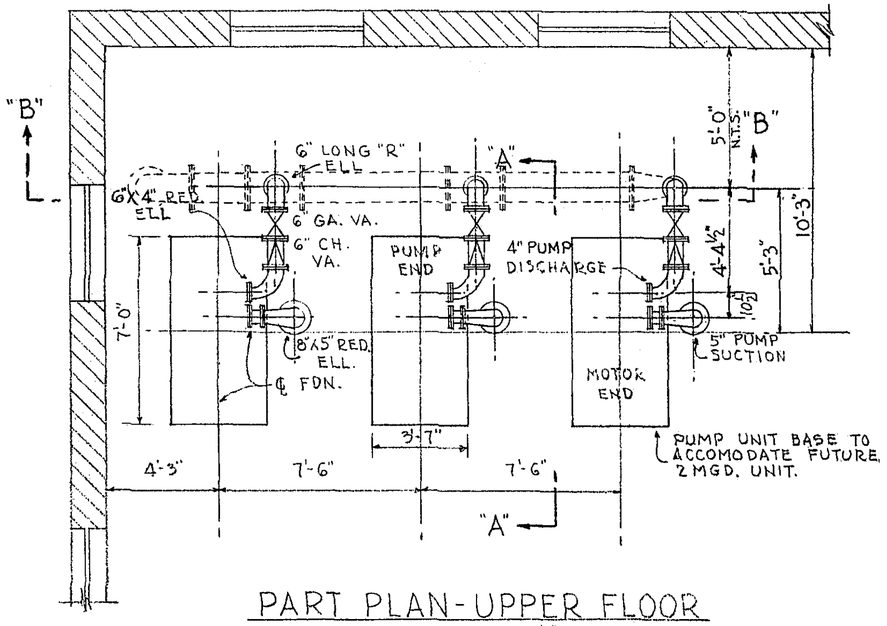

PART PLAN-UPPER FLOOR

SCALE-$\frac{1}{4}$"=1'-0"

CRYSTAL SPRINGS BOOSTER PUMPING STATION

DE LAVAL TWO STAGE PUMP UNIT LAYOUT

ROANOKE WATER WORKS
ROANOKE, VA.

ALVORD, BURDICK, & HOWSON
ENGINEERS CHICAGO.
OCT. 16-1951.