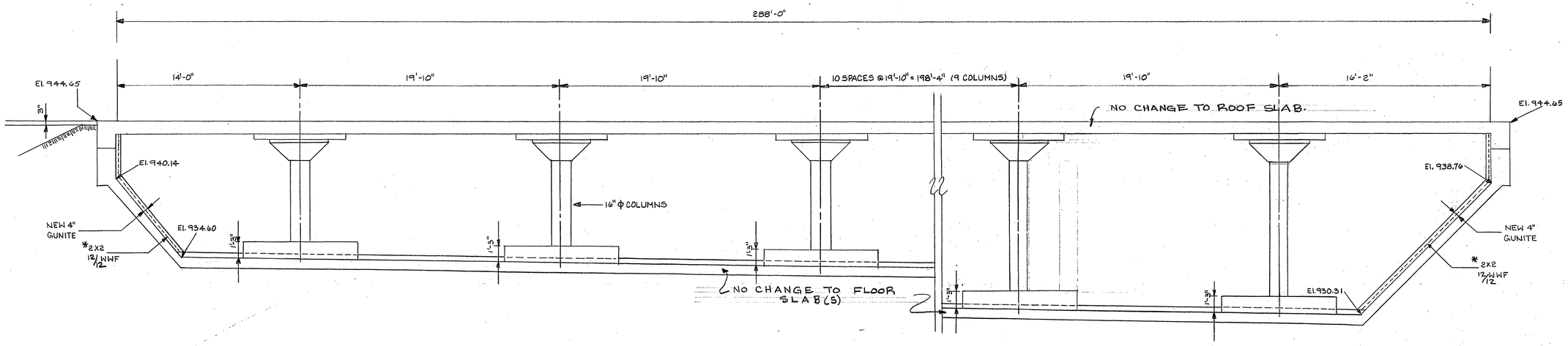

SECTION B-B

SCALE: ¼" = 1'-0"

* "W.W.F." WELDED WIRE FABRIC MAY BE 2x2 12/12 OR 3x3 10/10 - SEE SPECS

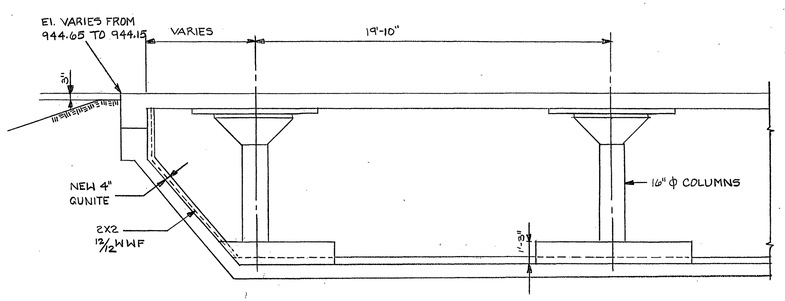

SECTION A-A

SCALE: ¼" = 1'-0"

DATE	REV.	DESCRIPTION	BY
		ADDITION 4" GUNITE	

CITY ENGINEER

GUNITE WALLS OF
CRYSTAL SPRING RESERVOIR
LAKE RD AND JEFFERSON ST.
ROANOKE, VIRGINIA

DRAWN NH
CHECKED
APP'D
DATE 6-1-82
JOB NO. 19-81A
SHEET 2 OF 3

CITY OF ROANOKE
OFFICE OF CITY ENGINEER
ROANOKE, VIRGINIA

CONTRACTOR MUST VERIFY ALL DIMENSIONS AT PROJECT BEFORE PROCEEDING WITH WORK