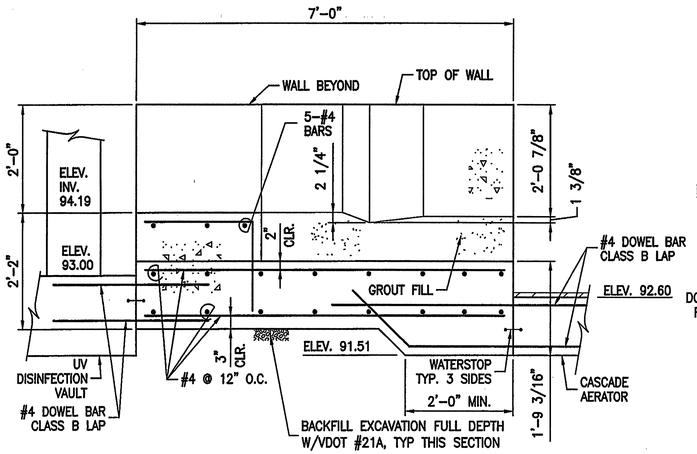

PARSHALL FLUME-SECTION

SCALE: 3/4"=1'-0"

NOTE: GROUT BOTTOM FOR PARSHALL FLUME PER MANUFACTURER'S RECOMMENDATIONS.

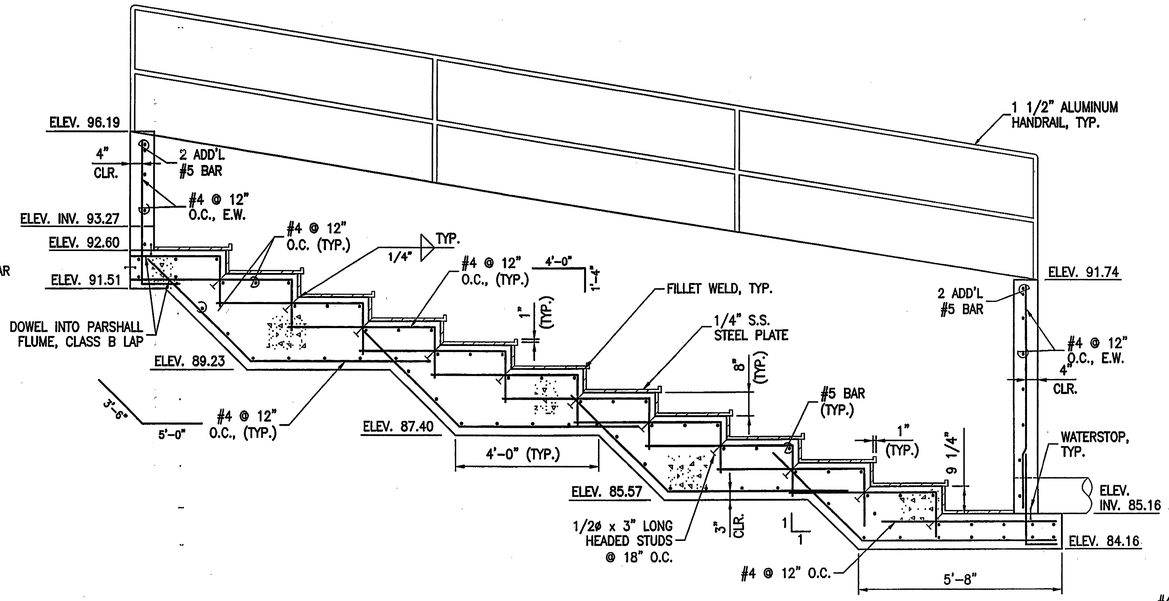

CASCADE AERATOR-ELEVATION

SCALE: 1/2"=1'-0"

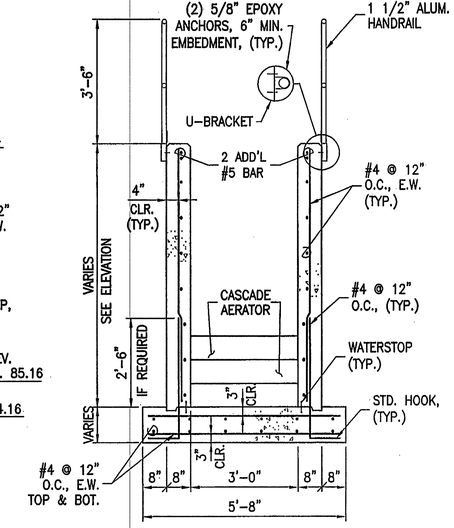

SECTION

SCALE: 1/2"=1'-0"

19 S-6 S-6

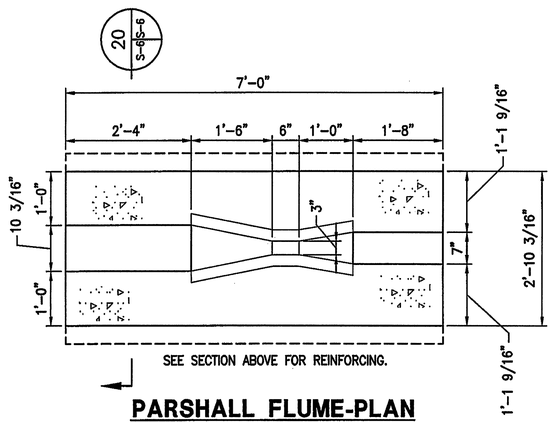

PARSHALL FLUME-PLAN

SCALE: 3/4"=1'-0"

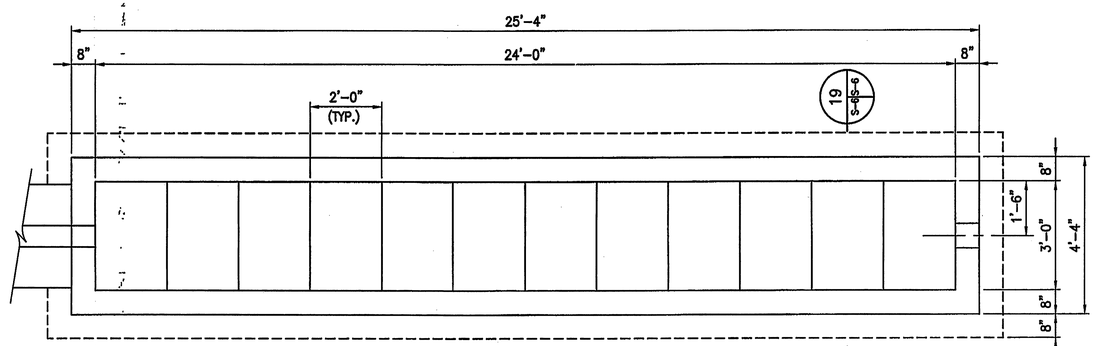

CASCADE AERATOR-PLAN

SCALE: 1/2"=1'-0"

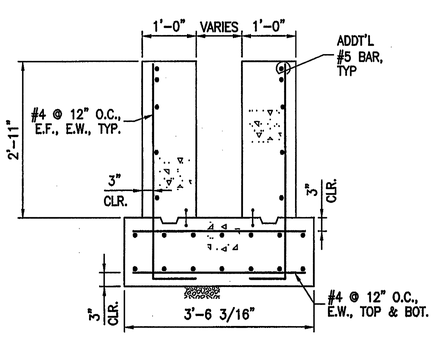

SECTION

SCALE: 3/4"=1'-0"

20 S-6 S-6

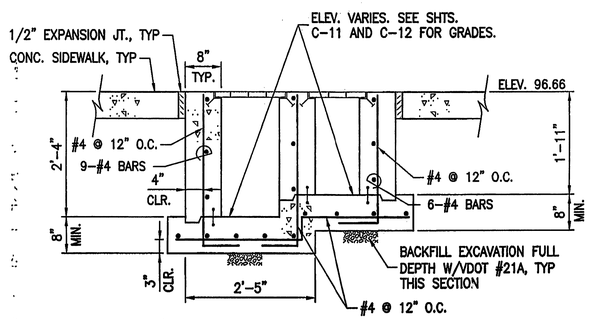

SECTION

SCALE: 3/4"=1'-0"

18 S-1 S-6

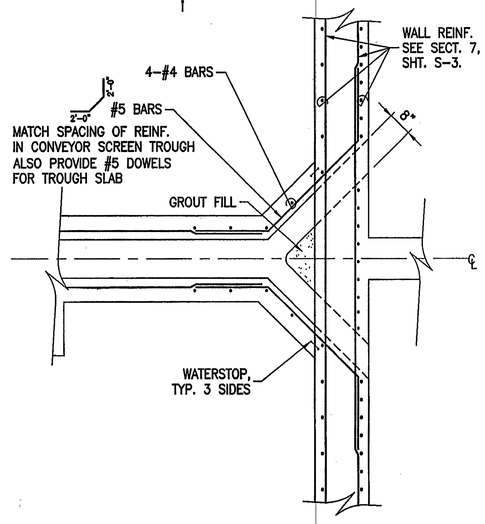

DETAIL D

SCALE: 1/2"=1'-0"

WWWA ID# 8V3LWV

COMMONWEALTH OF VIRGINIA
CHAD M. THOMAS
No. 036862
5/26/05
PROFESSIONAL ENGINEER

Revisions	Date

Issue Date: APRIL 2005
Drawn By: LSM
Designed By: CMT
Checked By: SAC
Date:

Mattern & Craig
CONSULTING ENGINEERS • SURVEYORS
701 FIRST STREET, S.W.
ROANOKE, VIRGINIA 24016
(540) 345-5932
FAX (540) 345-7691

FINCASTLE WASTEWATER TREATMENT PLANT

DETAILS

BOTETOURT COUNTY, VIRGINIA

Vertical Scale: N/A

Horizontal Scale: AS SHOWN

Commission Number: 2305

Sheet No: S-6