SHIPPING ITEM	QTY.	PC. MK.	QTY.	MATERIAL REQ'D	DESCRIPTION	UNIT WT.
18-02	4	(w/10-AT-01		FB 1/4" x 2" x 7 9/16" LG.	CONDUIT LUG	
18-02	2	(w/PEDESTAL)		FB 1/4" x 2" x 6" LG.	CONDUIT LUG	
18-03	2	(w/10-AT-01		AN 4" x 4" x 1/4" x 4" LG.	LIGHT MOUNT	
18-03	1	(w/TOP PED)		AN 4" x 4" x 1/4" x 4" LG.	LIGHT MOUNT	
18-04	2	(w/PEDESTAL)		FB 1/4" x 2" x 4'-6 1/4" LG.	CABLE BRACKET	
18-04	1	(w/TOP PED)		FB 1/4" x 2" x 4'-6 1/4" LG.	CABLE BRACKET	
18-06	4	(w/10-AT-01		FB 1/4" x 2" x 4'-0"	CABLE BRACKET	

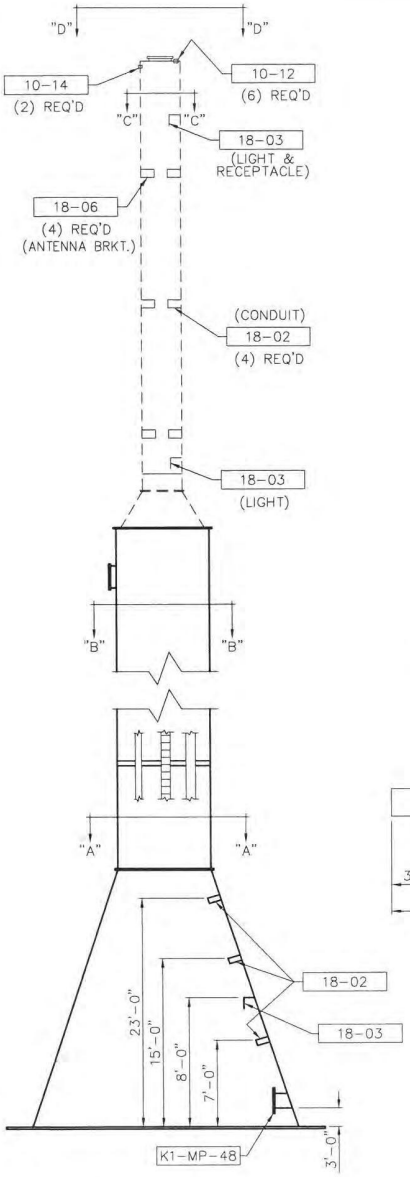

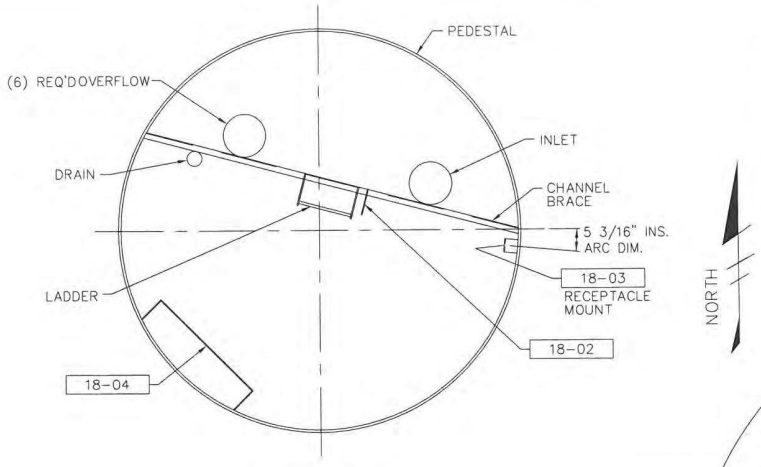

SECTION "B-B"

NOTE:
MOUNT LIGHTS ON CHANNEL BRACES THROUGH PEDESTAL

18-06
(FORMED VIEW)

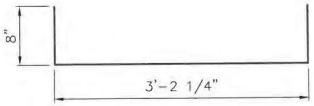

CABLE BRACKET

18-04
(3) REQ'D

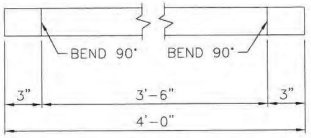

CABLE BRACKET (A.T.)

18-06
(4) REQ'D

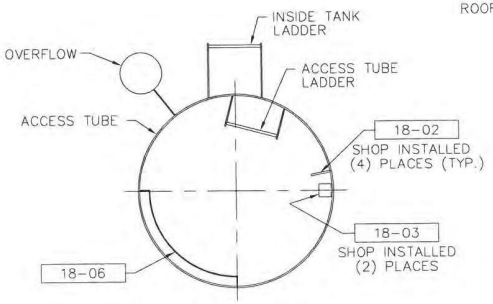

SECTION "C-C"

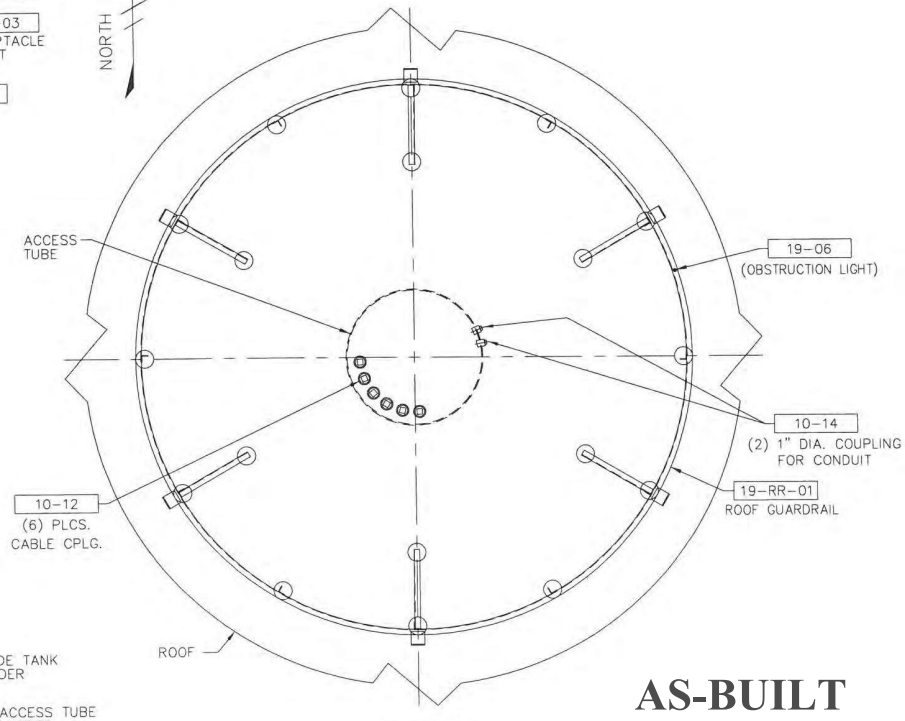

VIEW "D-D"

AS-BUILT

NOTES:
1. ALL ELECTRICAL EQUIPMENT SHALL BE FURNISHED AND INSTALLED IN ACCORDANCE WITH ALL APPLICABLE CODES, PROJECT PLANS, AND SPEC.'S BY C.T.I. SUBCONTRACTOR.

COMMONWEALTH OF VIRGINIA
GERALD A. BURKE
Lic. No. 034963
PROFESSIONAL ENGINEER
12-2019

REV.	BY:	DATE	REMARKS

CALDWELL Since 1887
Water · Energy · Industrial

FRANKLIN COUNTY, VIRGINIA
500,000 GALLON PEDESPHERE

BY: TSY
TITLE: ELECTRICAL CLIP DETAILS
DATE: 12/13/19
DRAWING NO.: E-8884 18