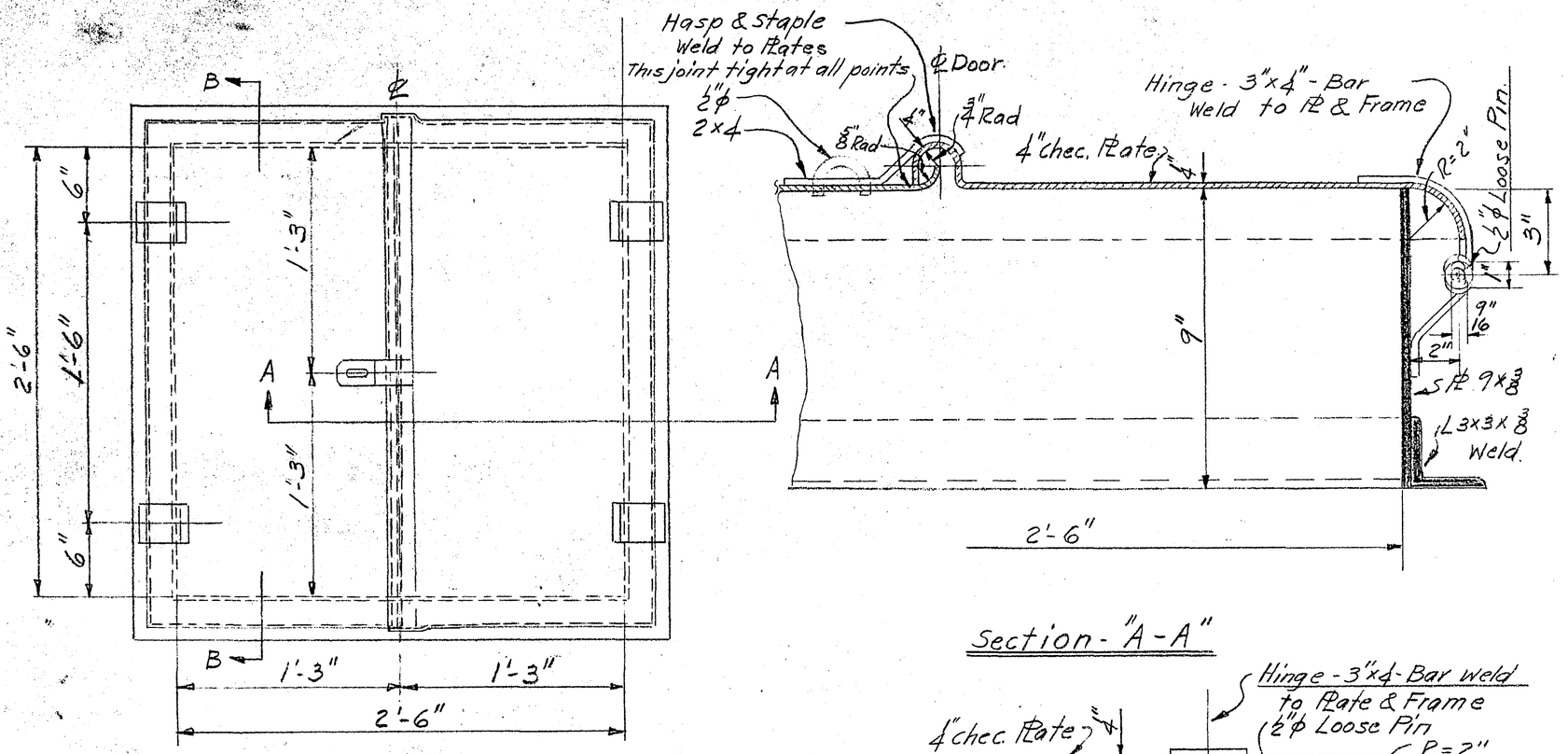

Reqd - One - Galv. Man-hole - Cover & Frame

Section - "A-A"

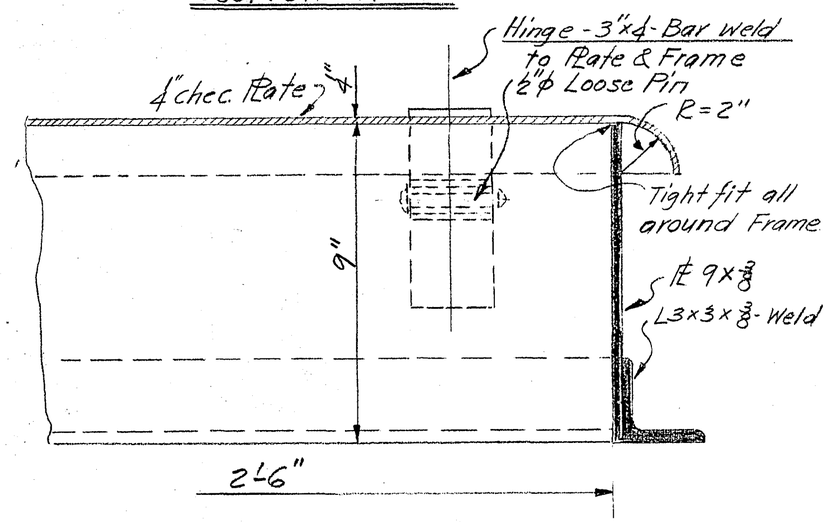

Section - "B - B"

CONTRACT No. M 820	Alvord Burdick & Howson Engineers Chicago Ill	SHEET #1
SUBJECT Galv. Manhole Cover & Frame		PRINT RECORD NO. 3 DATE 9/18-52
BUILDING Garden City Reservoir		
Roanoke Waterworks Roanoake Va		
CONTRACTOR J. E. Jewell		
FINISH Galv.		
DRAWN BY H / CHECKED BY / APPROVED		
ROANOKE IRON WORKS, INC. ROANOKE, VA.		