| BILL OF MATERIAL | | | | | |
|---|---|---|---|---|---|
| SUB-ASSY NO | PART NO | QTY | DESCRIPTION | MAT'L. REQ'D. | PC. WT. |
| ALL ITEMS LISTED BELOW SHIP LOOSE | | | | | |
| | 11-10-01 | 69 | GIRDER SEGMENT | 1/4" PL. | 200 |
| | 11-10-02 | 2 | GIRDER SEGMENT | USE DROP FROM 11-10-01 | 200 |
| | 11-10-03 | 1 | GIRDER SEGMENT | USE DROP FROM 11-10-01 | 200 |
| | 11-20-01 | 72 | POST SOCKET | 1" SCH 40 PIPE x 6" | |
| A | 11-10-05 | 50 | FLUTE FILLER PLATE | 1/4" PL. (MISC. DROP) | 16 |
| | 11-10-06 | 72 | GIRDER GUSSET | 1/4" PL. (MISC. DROP) | 13 |
| | 11-40-01 | 72 | GIRDER TIE BAR | 6" x 1/4" BAR x 23" | 10 |
| | 11-40-02 | 72 | GIRDER SPLICE BAR | 4" x 1/4" BAR x 8" LG. | 3 |

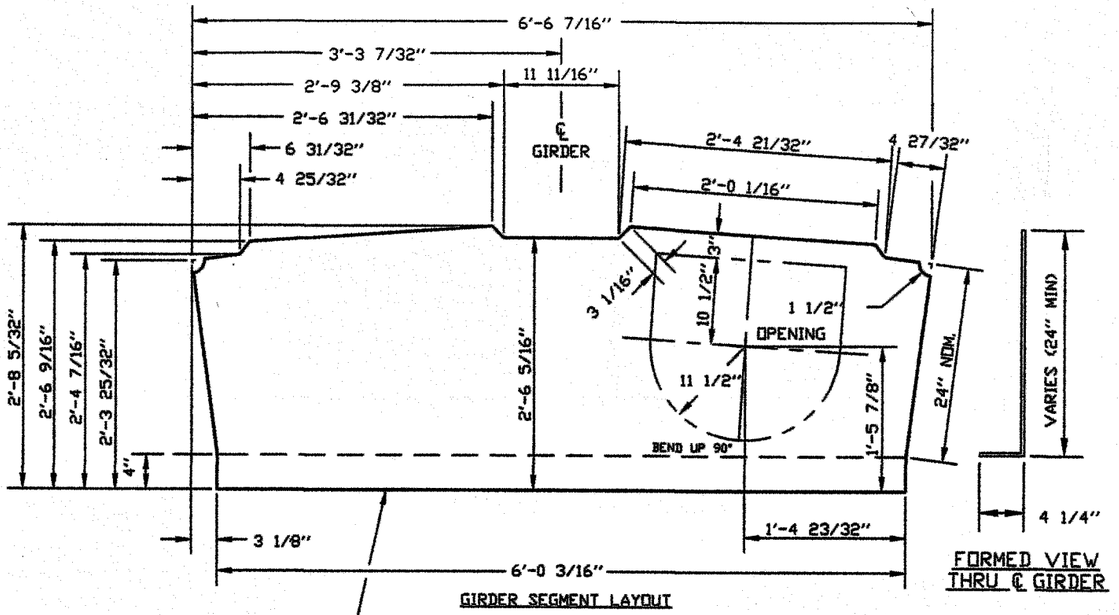


GIRDER SEGMENT LAYOUT

FORMED VIEW THRU ℄ GIRDER

11-10-01 WITHOUT OPENING, BEND AS SHOWN
11-10-02 WITH OPENING, BEND AS SHOWN
11-10-03 WITH OPENING, BEND OPPOSITE HAND

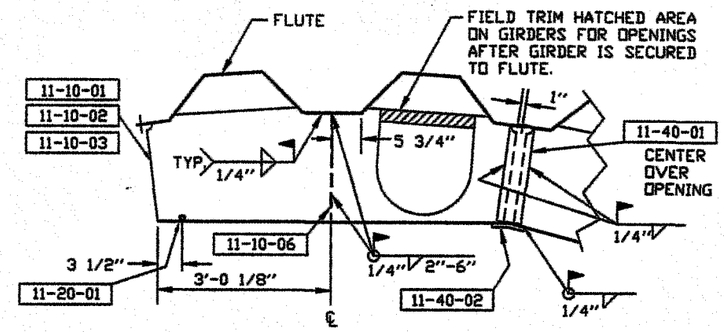


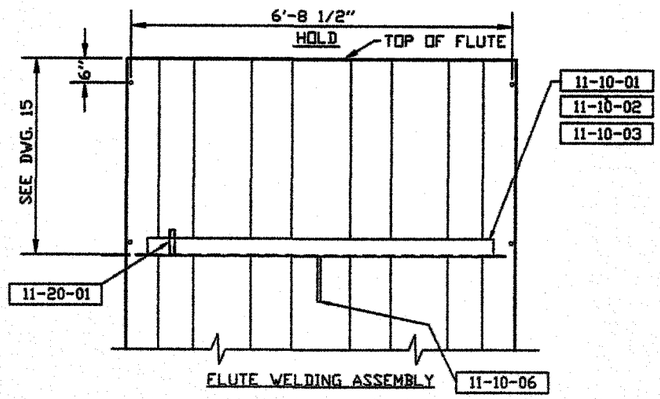


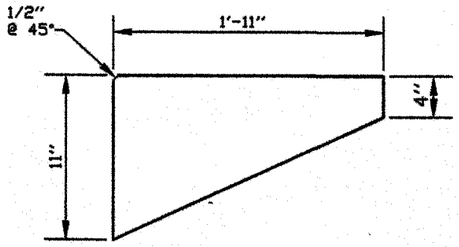


GIRDER GUSSET
11-10-06

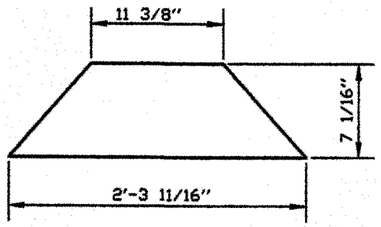


FLUTE FILLER PLATE
11-10-05

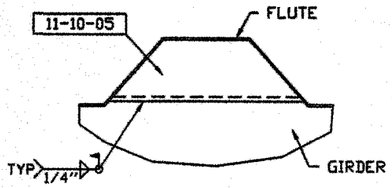


FLUTE FILLER PLATE FIELD ASSY.

FILLER PLATES MUST BE IN PLACE BEFORE LADDERS ARE MOUNTED.

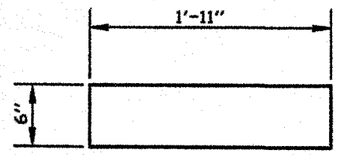


GIRDER TIE BAR
11-40-01

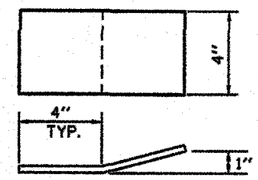


GIRDER SPLICE BAR
11-40-02

FOR GIRDER LEVELS 2 AND 3 INSTALL FILLER PLATE TO ALL GIRDER OPENINGS WITHIN RAILINGS EXCEPT FOR THOSE IN WHICH A LADDER WILL PASS THROUGH. FOR GIRDER LEVEL 1 (CONDENSATE CEILING LEVEL), INSTALL FILLER PLATES TO ALL GIRDER OPENINGS EXCEPT THE LADDER OPENING.

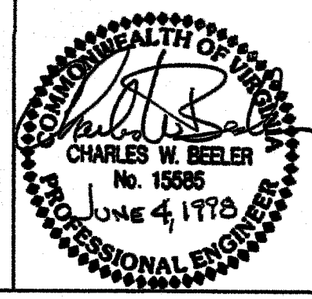


| REV. | BY: | DATE | REMARKS |
|---|---|---|---|
| A | PLN | 7-6 | AS NOTED |

CALDWELL TANKS, INC.
LOUISVILLE, KY.

BOTETOURT COUNTY, VA

BY: BAW/TB
TITLE: GIRDER DETAILS
DATE: 5-98
DRAWING NO: E-4291 11