BILL OF MATERIAL

SUB-ASSY NO	PART NO	QTY	DESCRIPTION	MAT'L. REQ'D.	PC. WT.
28-CD-01		1	CEILING DRAIN ASSY.		
	28-90-02	1	45° PVC BEND	FOR 3" DIA. PVC	
	28-90-04	1	90° PVC BEND	FOR 3" DIA. PVC W/ THREADED ENDS	
	28-90-03	1	PVC PIPE	3" DIA. x 25'-0" LG. (THR'D x P.E.)	
	28-22-08	1	CLOSE NIPPLE	FOR 3" DIA. PIPE	
	28-90-06	1	STEEL PIPE UNION	FOR 3" DIA. PIPE	
	28-20-01	1	STEEL PIPE (THR'D x PE)	3" DIA. x 6" LG.	
	28-90-07	2	PVC PIPE UNION (EXTRA)	FOR 3" DIA. PVC	
	28-90-09	1	GLUE FOR PVC PIPE	(1) CAN	
	28-90-10	1	CLEANER FOR PVC PIPE	(1) CAN	

BILL OF MATERIAL

SUB-ASSY NO	PART NO	QTY	DESCRIPTION	MAT'L. REQ'D.	PC. WT. LBS.
28-CD-02		1	CONDENSATE CEILING DRAIN		
	28-20-02	1	PIPE (P.E. x P.E.)	2" DIA. x 4'-0" LG.	
	28-20-04	1	STD. PIPE (P.E. x P.E.)	2" DIA. x 3'-0" LG.	

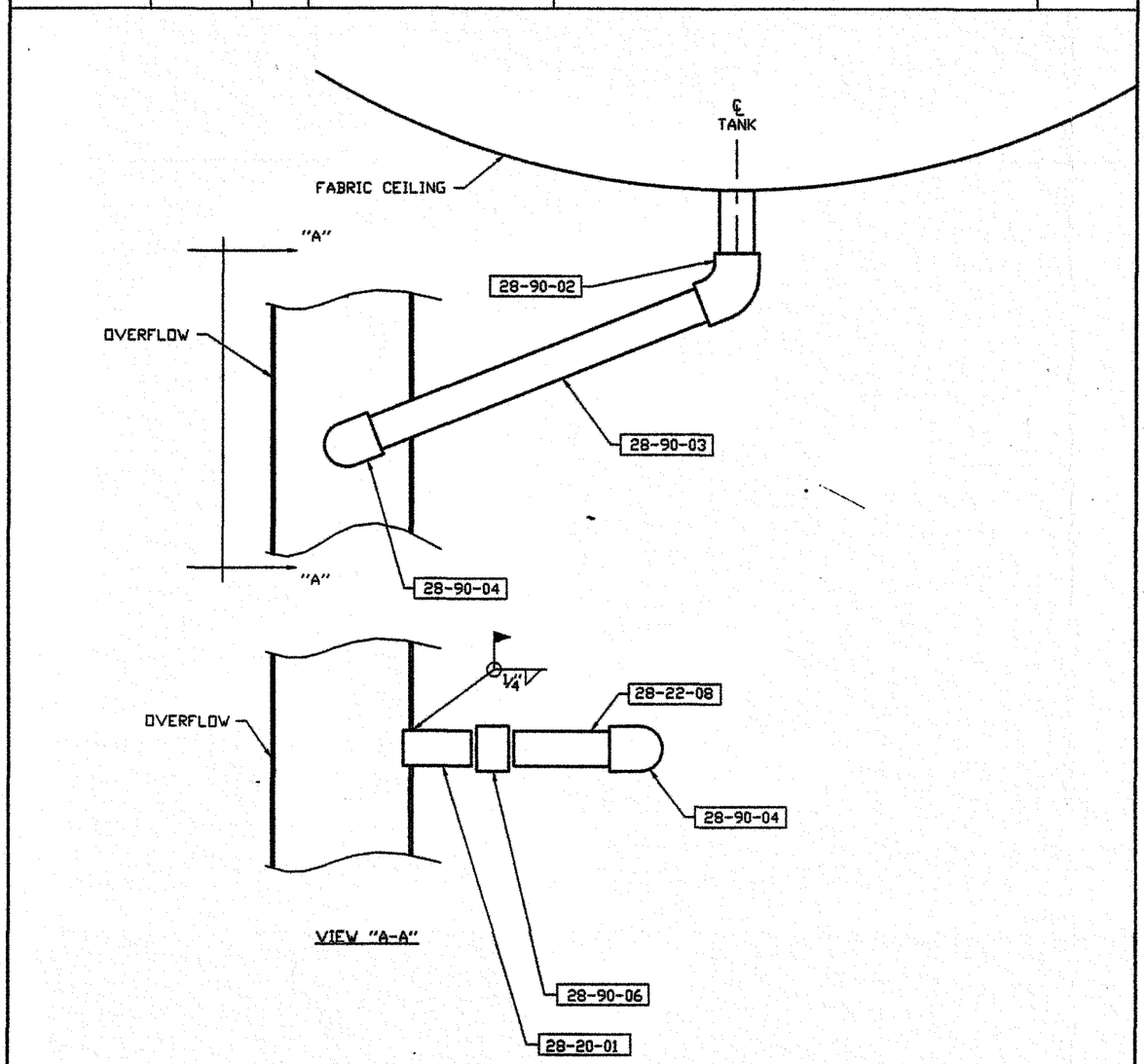

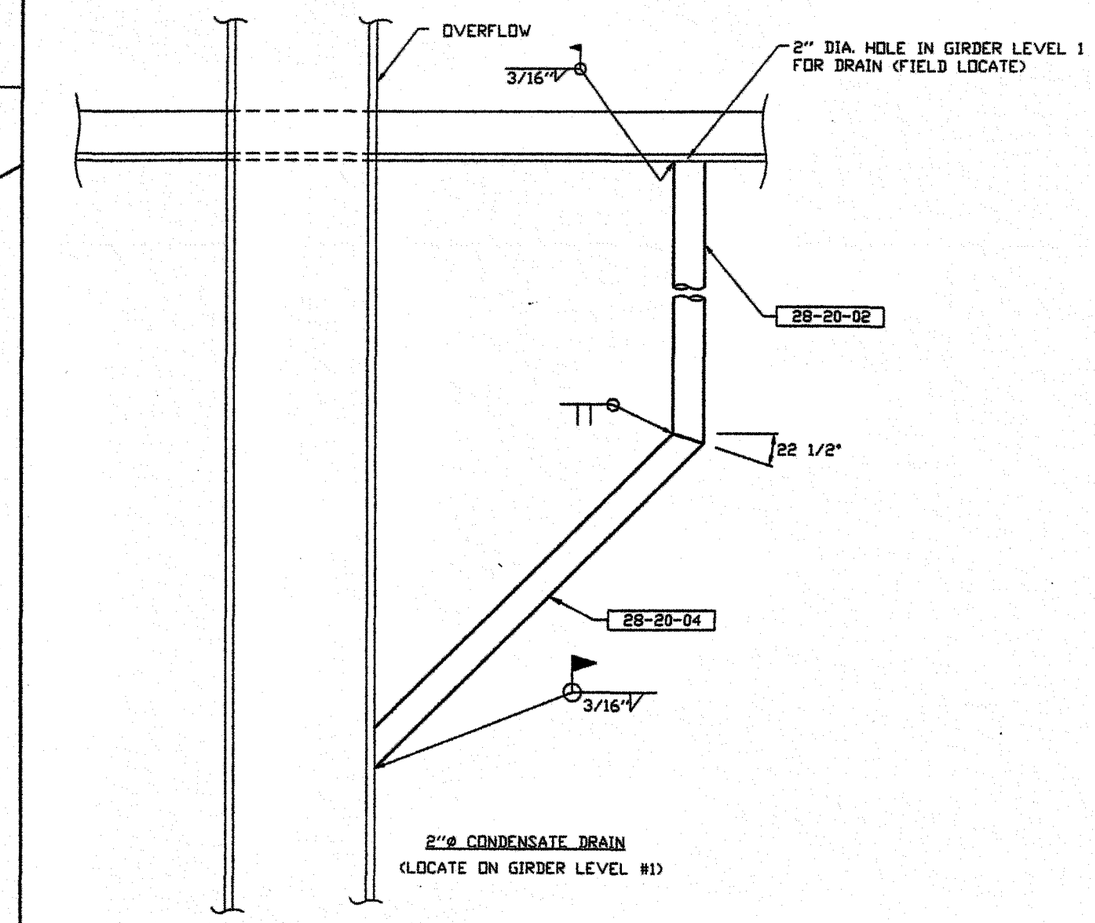

2"Ø CONDENSATE DRAIN
(LOCATE ON GIRDER LEVEL #1)

COMMONWEALTH OF VIRGINIA
CHARLES W. BEELER
No. 15585
JUNE 4, 1998
PROFESSIONAL ENGINEER

REV.	BY:	DATE	REMARKS

CALDWELL TANKS, INC.
LOUISVILLE, KY.

BOTETOURT COUNTY, VA

BY: BAW

TITLE: CONDENSATE CEILING DRAIN DETAIL

DATE: 5-98

DRAWING NO.: E-4291 28