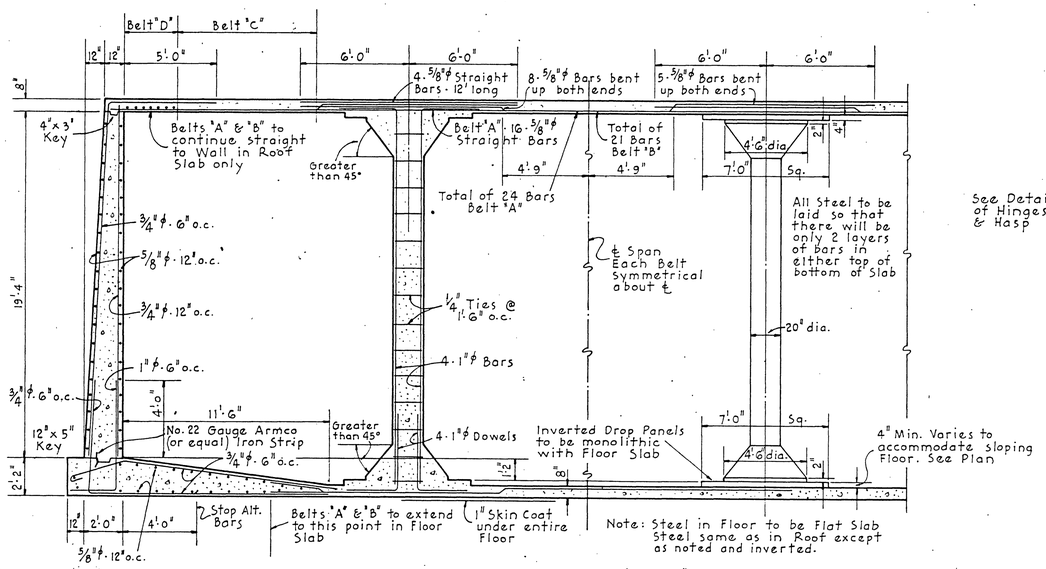

TYPICAL SECTION "A-A"

SCALE: 1/4" = 1'-0"

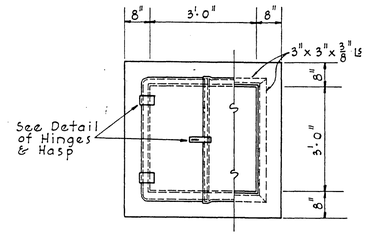

PLAN

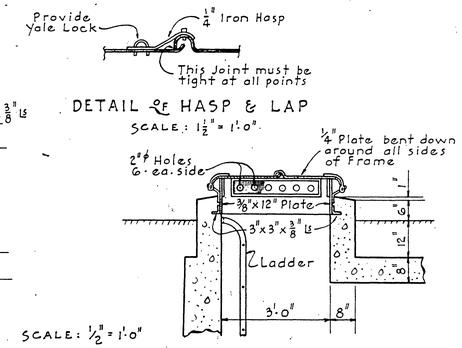

DETAIL of HASP & LAP

SCALE: 1 1/2" = 1'-0"

SCALE: 1/2" = 1'-0"

SECTION

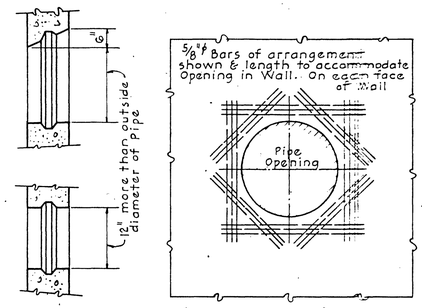

TYPICAL DETAIL of OPENINGS for WALL PIPES

SCALE: 1/2" = 1'-0"

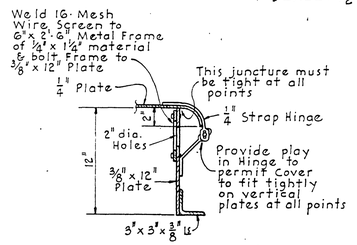

DETAIL of HINGE

SCALE: 1 1/2" = 1'-0"

Notes:
Each Cover shall be made from a single sheet of metal and bent down around all sides as shown. Cut out corners and weld after bending. Frames and Covers when installed shall be made absolutely tight against rain or seepage. Provide all Yale Locks to open with one key.

TYPICAL MANHOLE DETAILS

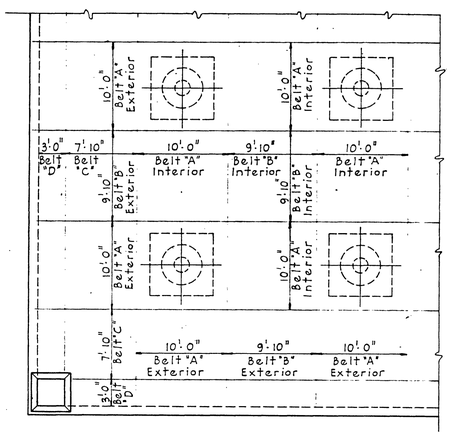

TYPICAL PANEL PLAN

SCALE: 1/8" = 1'-0"

FLAT SLAB STEEL

(Listed for Roof Slab - Floor Slab is similar but inverted except as noted)

INTERIOR PANELS

Belt "A" - 16-5/8"ϕ straight bars in bottom of slab. Bars to span 2 panels with 30" lap at splices; splices to be at column heads and are to be staggered.
8-5/8"ϕ bars to be bent up as shown in Section "A-A"
4-5/8"ϕ straight bars 12' long over column heads.

Belt "B" - 16-5/8"ϕ straight bars same as Belt "A"
5-5/8"ϕ bars bent as shown in Section "A-A"

EXTERIOR PANELS:

Belt "A" - Like interior panel belt except bending. See Section "A-A"

Belt "B" - Like interior panel belt except bending. See Section "A-A"

Belt "C" - Like interior Belt "B" but made up of 12-5/8"ϕ straight bars & 7-5/8"ϕ bent-up bars (This Belt occurs only in the Roof Slab. See Section "A-A")

Belt "D" - 7-5/8"ϕ straight bars in Roof Slab only.

Note: Reinforcing Steel shall have a protective covering of 1" minimum to 1 1/2" maximum.

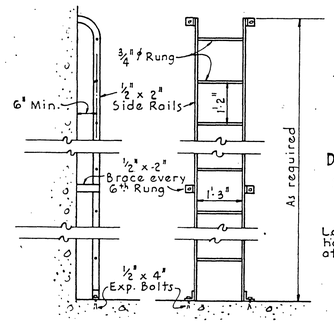

LADDER DETAIL

SCALE: 1/2" = 1'-0"

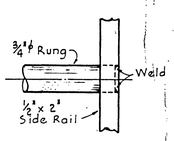

DETAIL of RUNG

SCALE: HALF SIZE

Ladder to be hot galvanized after fabrication

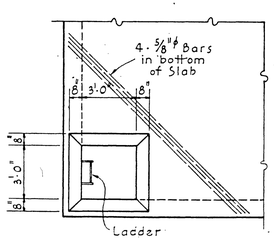

PLAN

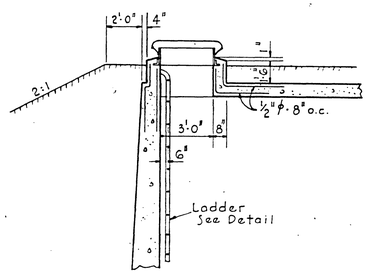

SECTION

DETAIL of MANHOLE

SCALE: 1/4" = 1'-0"

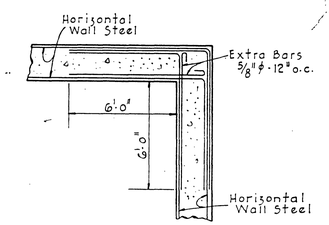

TYPICAL WALL CORNER DETAIL

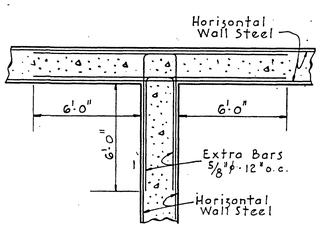

TYPICAL WALL INTERSECTION DETAIL

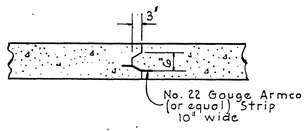

TYPICAL FLOOR CONSTRUCTION JOINT

22

REINFORCED CONCRETE RESERVOIR
DETAILS
ROANOKE WATER WORKS
ROANOKE, VIRGINIA

ALVORD, BURDICK & HOWSON
ENGINEERS CHICAGO

1944