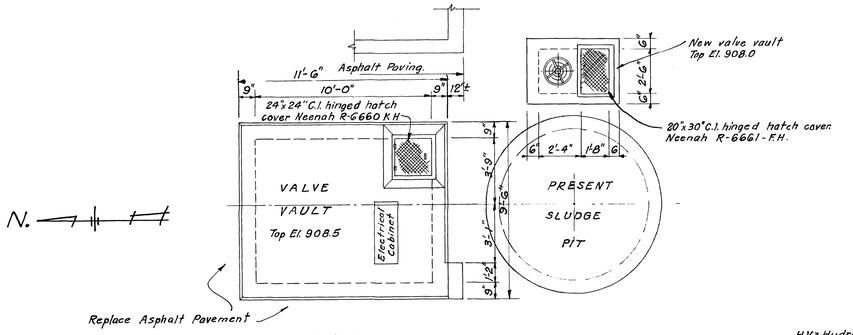

TOP PLAN
Scale: 1/4" = 1'-0"

H.V. = Hydraulic cylinder operated plug type sludge valves
P.V. = Solenoid operated pilot valve for controling sludge valves (H.V.'s)

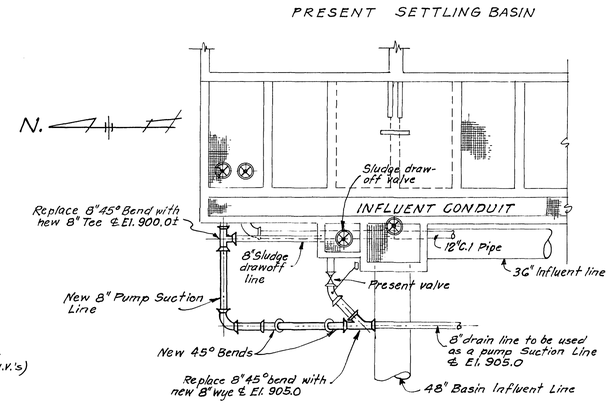

PLAN OF PIPING REVISION FOR PUMP SUCTION LINE
Scale: 1/8" = 1'-0"

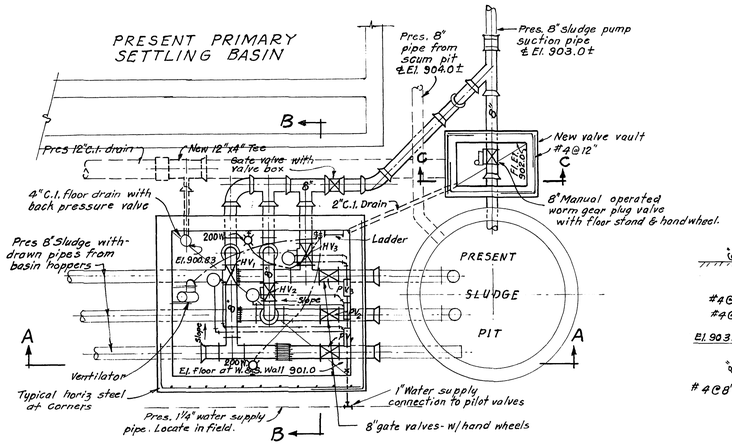

PLAN BELOW EL. 908.0
Scale: 1/4" = 1'-0"

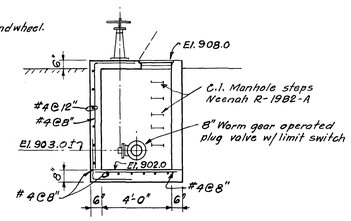

SECTION C-C
Scale: 1/4" = 1'-0"

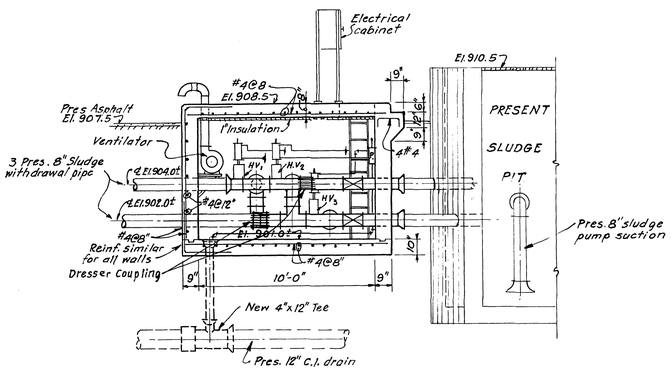

SECTION A-A
Scale: 1/4" = 1'-0"

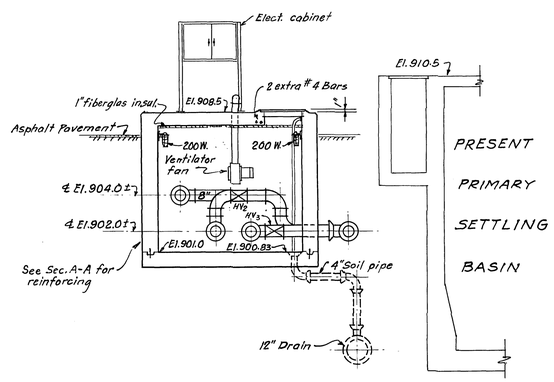

SECTION B-B
Scale: 1/4" = 1'-0"

11

ADDITIONS TO SEWAGE TREATMENT PLANT
ROANOKE, VIRGINIA

REVISIONS TO SLUDGE PUMP SUCTION LINES

ALVORD, BURDICK & HOWSON
ENGINEERS CHICAGO
1966