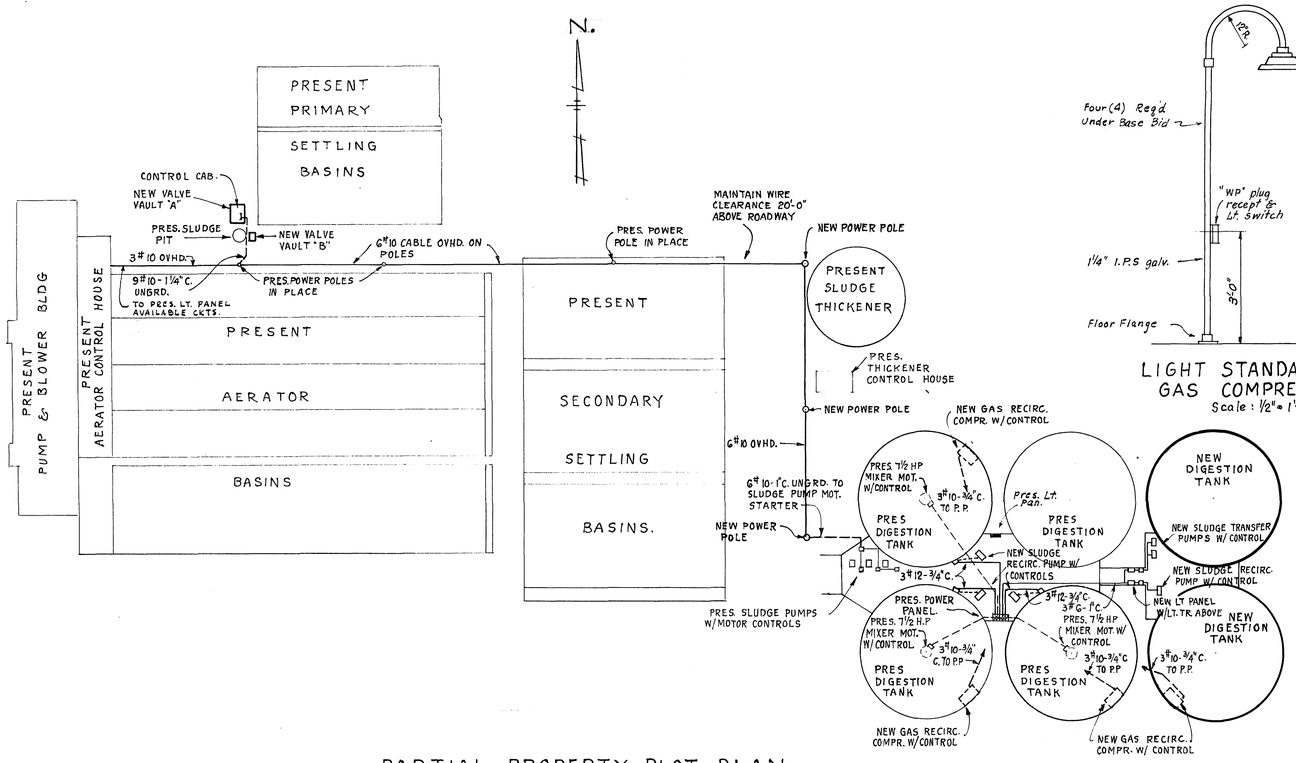

PARTIAL PROPERTY PLOT PLAN

SCALE : 1" = 50'

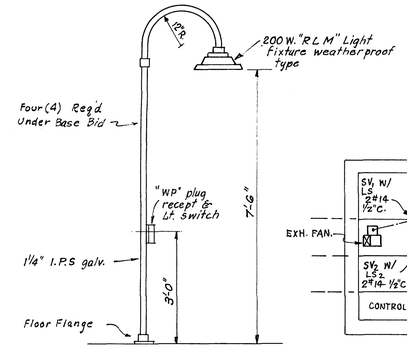

LIGHT STANDARD FOR GAS COMPRESSOR

Scale : ½" = 1'-0"

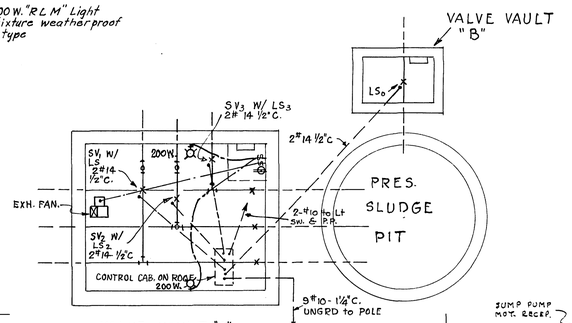

VALVE VAULT "A"

PLAN

SCALE : ¼" = 1'-0"

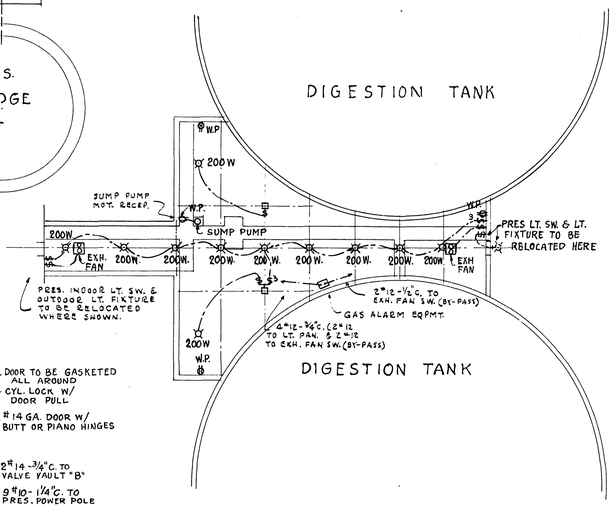

PLAN

SCALE : 1/16" = 1'-0"

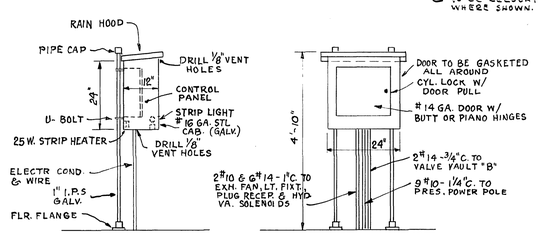

FRONT & SIDE ELEV. CONTROL CAB.

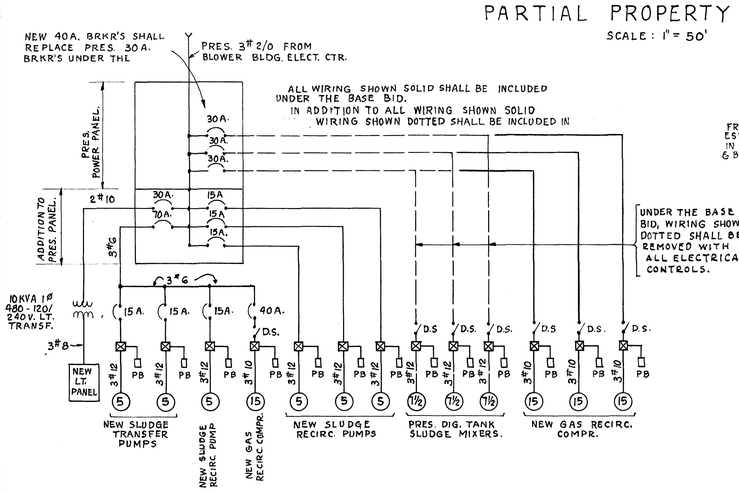

ONE LINE WIRING DIAGRAM

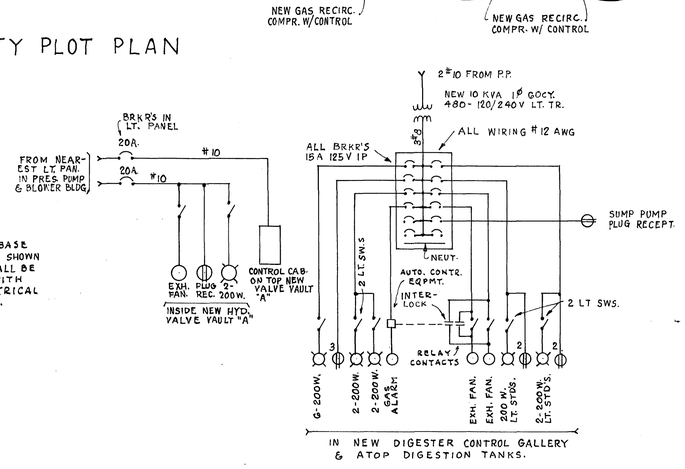

LIGHTING WIRING DIAGRAM.

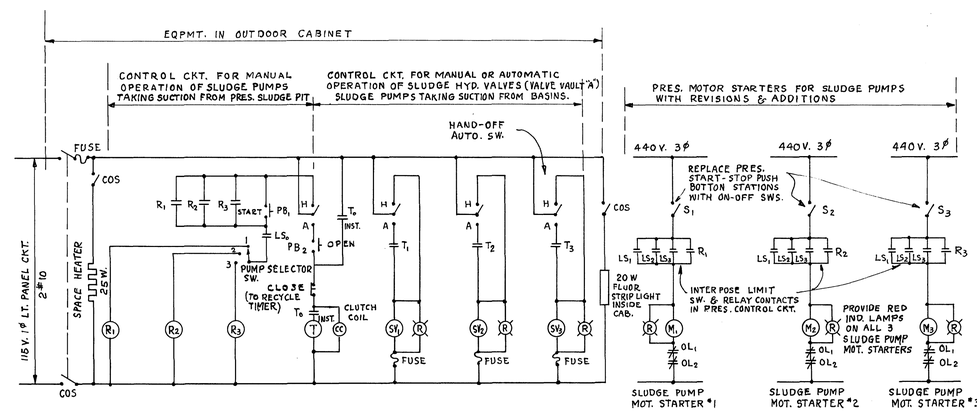

SCHEMATIC CONTROL DIAGRAM FOR HYDRAULIC SLUDGE VALVES & SLUDGE PUMPS

LEGEND

PB_1 = PUSH BUTTON FOR SLUDGE PUMP MANUAL OPER.
PB_2 = OPEN PUSH BUTTON CONTROL FOR HYDRAULIC VALVE & SLUDGE PUMP AUTO. OPERATION.
SV_1 = HYDRAULIC VALVE #1 FOUR WAY PILOT VALVE SOLENOID
SV_2 = " " #2 " " " "
SV_3 = " " #3 " " " "
T = TIMER WITH INSTANTANEOUS CONTACTS & TIMED SEQUENCE CONTACT (T_0, T_1, T_2 & T_3)

LS_0 = LIMIT SWITCH ON MANUAL VALVE IN VALVE VAULT "B"
LS_1 = LIMIT SWITCH ON HYD. VALVE #1
LS_2 = " " " " " #2
LS_3 = " " " " " #3
R_1 = AUXILIARY RELAY
R_2 = " "
R_3 = " "
(R) = RED INDICATING LAMP

M_1 = STARTER #1 LINE CONTACTOR COIL
M_2 = " #2 " " "
M_3 = " #3 " " "
COS. CUT OFF SWITCH

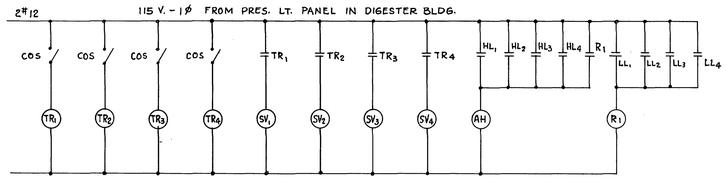

TR_1, TR_2, TR_3, & TR_4 = REPEAT TIMERS BY OTHERS
SV_1, SV_2, SV_3, & SV_4 = SOLENOID VALVES BY OTHERS
HL_1, HL_2, HL_3, & HL_4 = HIGH LEVEL CONTR. BY OTHERS
LL_1, LL_2, LL_3, & LL_4 = LOW LEVEL CONTR BY OTHERS
AH = ALARM HORN - BY OTHER
R_1 = AUX. RELAY - BY THIS CONTRACTOR
COS = CUTOFF SW. - BY THIS CONTRACTOR

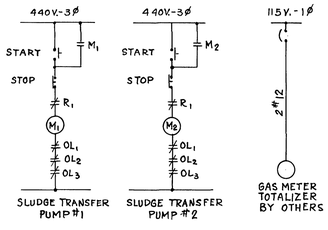

CONTROL DIAGRAMS FOR DIGESTION TANK LEVEL ALARM & PUMP SHUTOFF

13

ADDITIONS TO SEWAGE TREATMENT PLANT
ROANOKE, VIRGINIA

ELECTRICAL WORK

ALVORD, BURDICK & HOWSON
ENGINEERS CHICAGO
1966