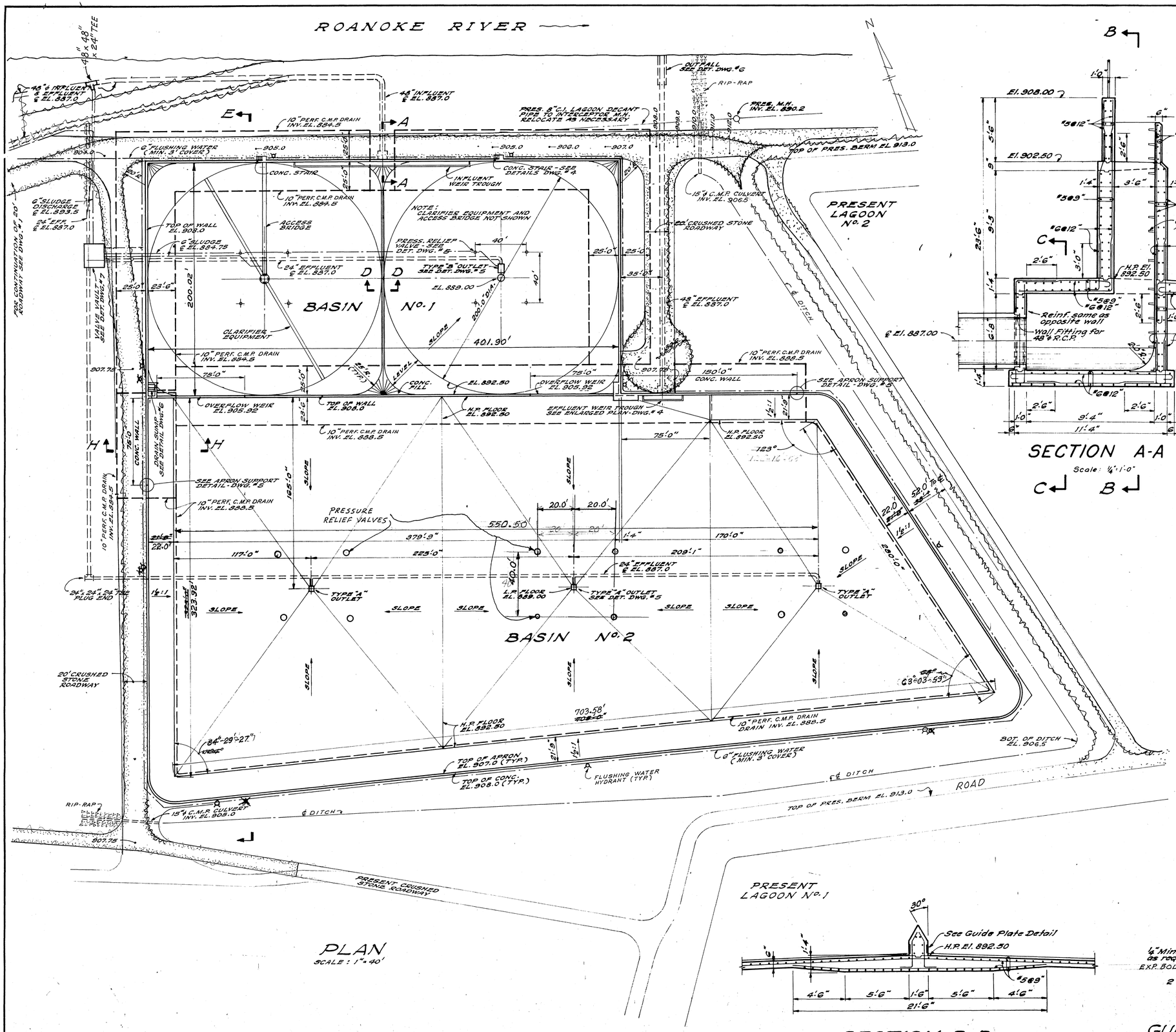

PLAN
SCALE: 1" = 40'

SECTION A-A
Scale: 1/4" = 1'-0"

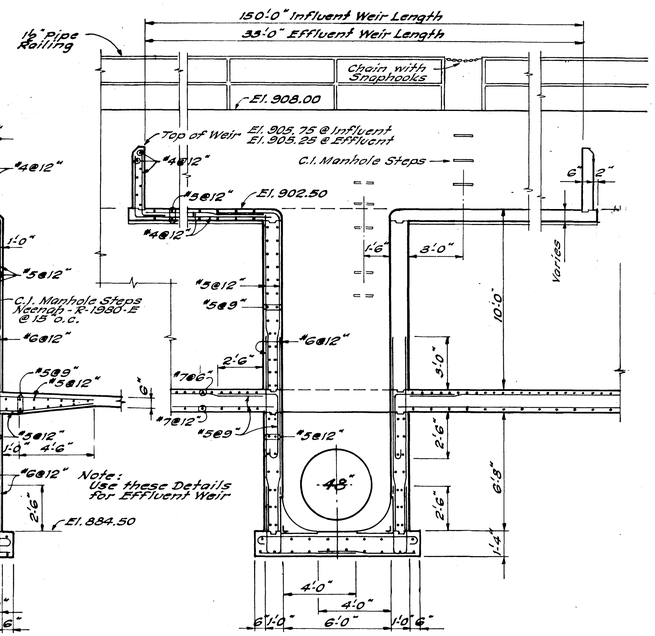

SECTION B-B
Scale: 1/4" = 1'-0"

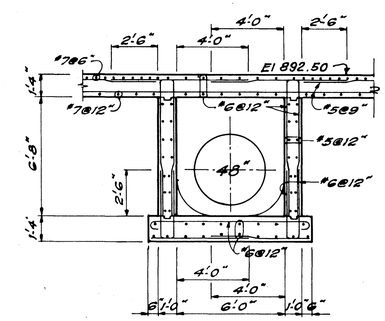

SECTION C-C
Scale: 1/4" = 1'-0"

SECTION D-D
Scale: 1/4" = 1'-0"

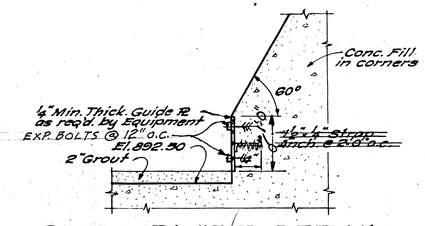

GUIDE PLATE DETAIL
No Scale

D. E. ECKMAN REGISTERED No. 03991 STATE OF VIRGINIA PROFESSIONAL ENGINEER

AS BUILT

CONTRACT D

3

ADDITIONS TO SEWAGE TREATMENT PLANT
ROANOKE, VIRGINIA

30 MG BASIN
DETAIL BASIN PLAN

ALVORD BURDICK & HOWSON
ENGINEERS CHICAGO

1973