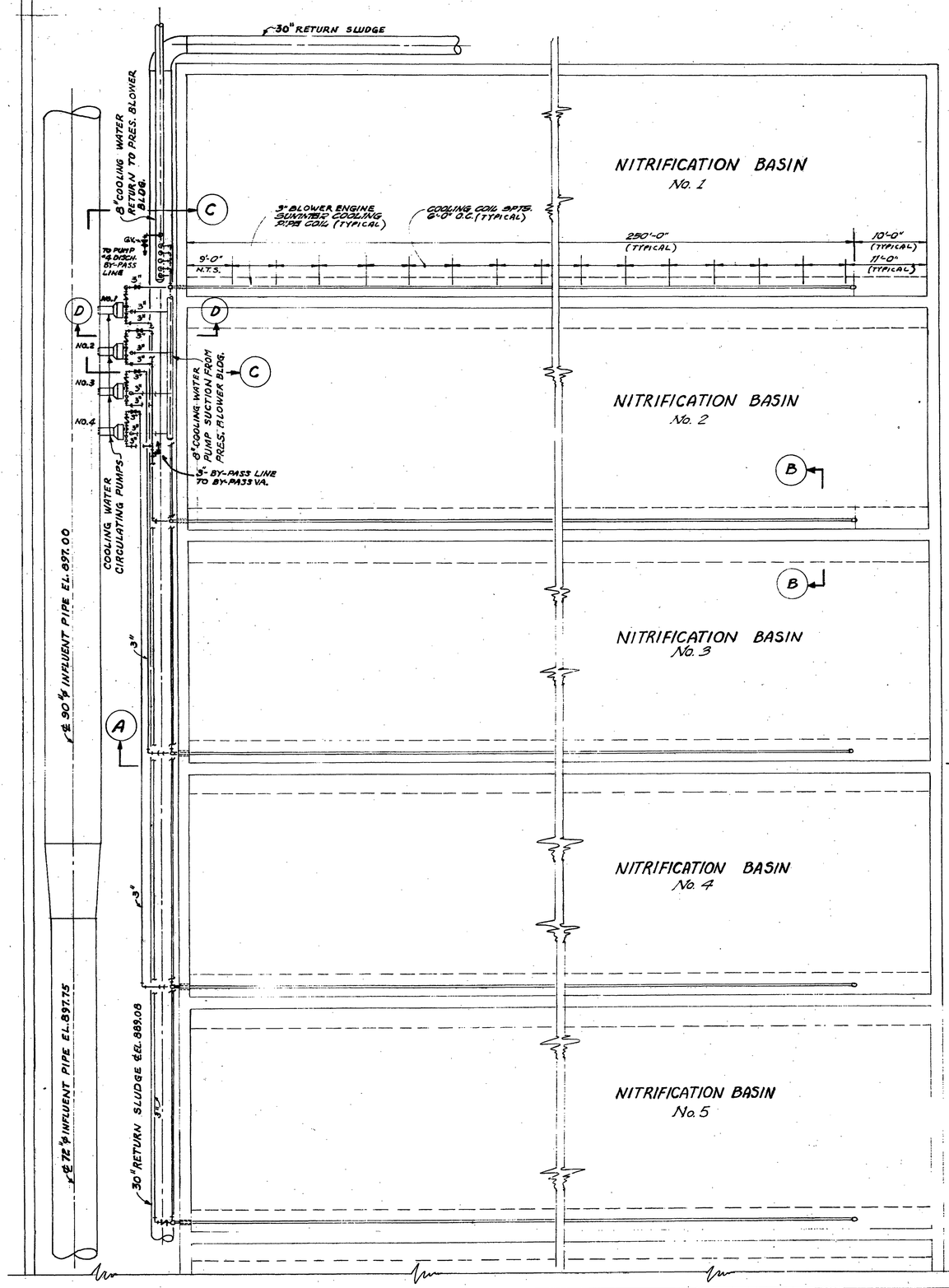

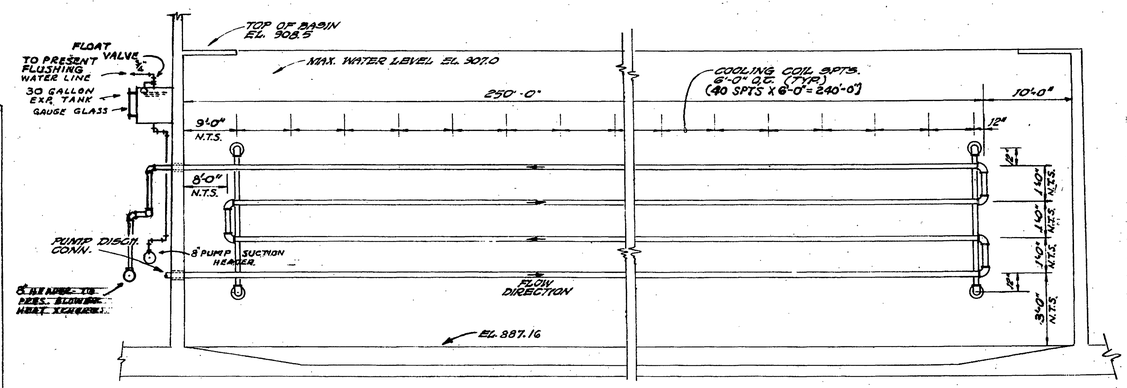

SECTION A-A
SCALE: 1/8" = 1'-0" HOR.
1/4" = 1'-0" VERT.

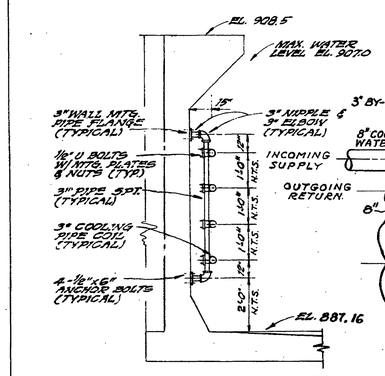

SECTION B-B
SCALE: 1/4" = 1'-0"

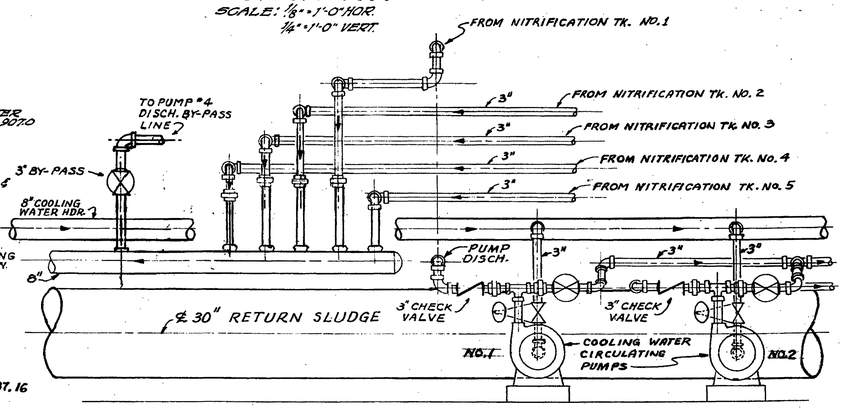

SECTION C-C
SCALE: 1/2" = 1'-0"

SEE SCHEMATIC DIAGRAM SH. #28 FOR COMPLETE SYSTEM CONNECTIONS.

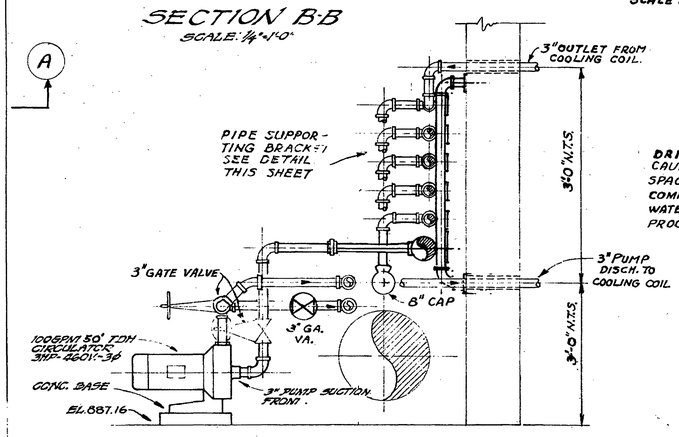

SECTION D-D
(TYP. INSTALLATION)
SCALE: 1/2" = 1'-0"

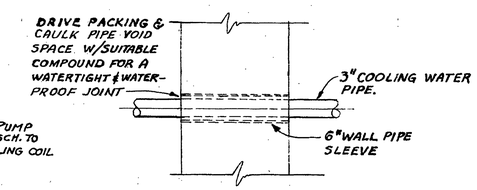

WALL SLEEVE DETAIL
SCALE: 1" = 1'-0"

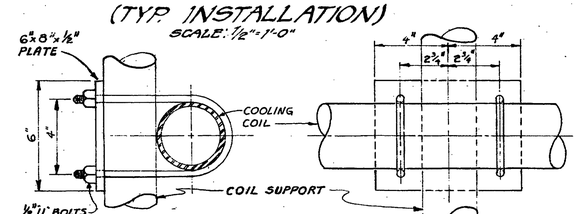

PIPE COIL FASTENING DETAIL SCALE: 3" = 1'-0"

30

CONTR. "E"

ADDITIONS TO SEWAGE TREATMENT PLANT
ROANOKE, VIRGINIA
BLOWER COOLING COIL DETAILS

DETAILS

ALVORD, BURDICK & HOWSON
ENGINEERS CHICAGO

1973