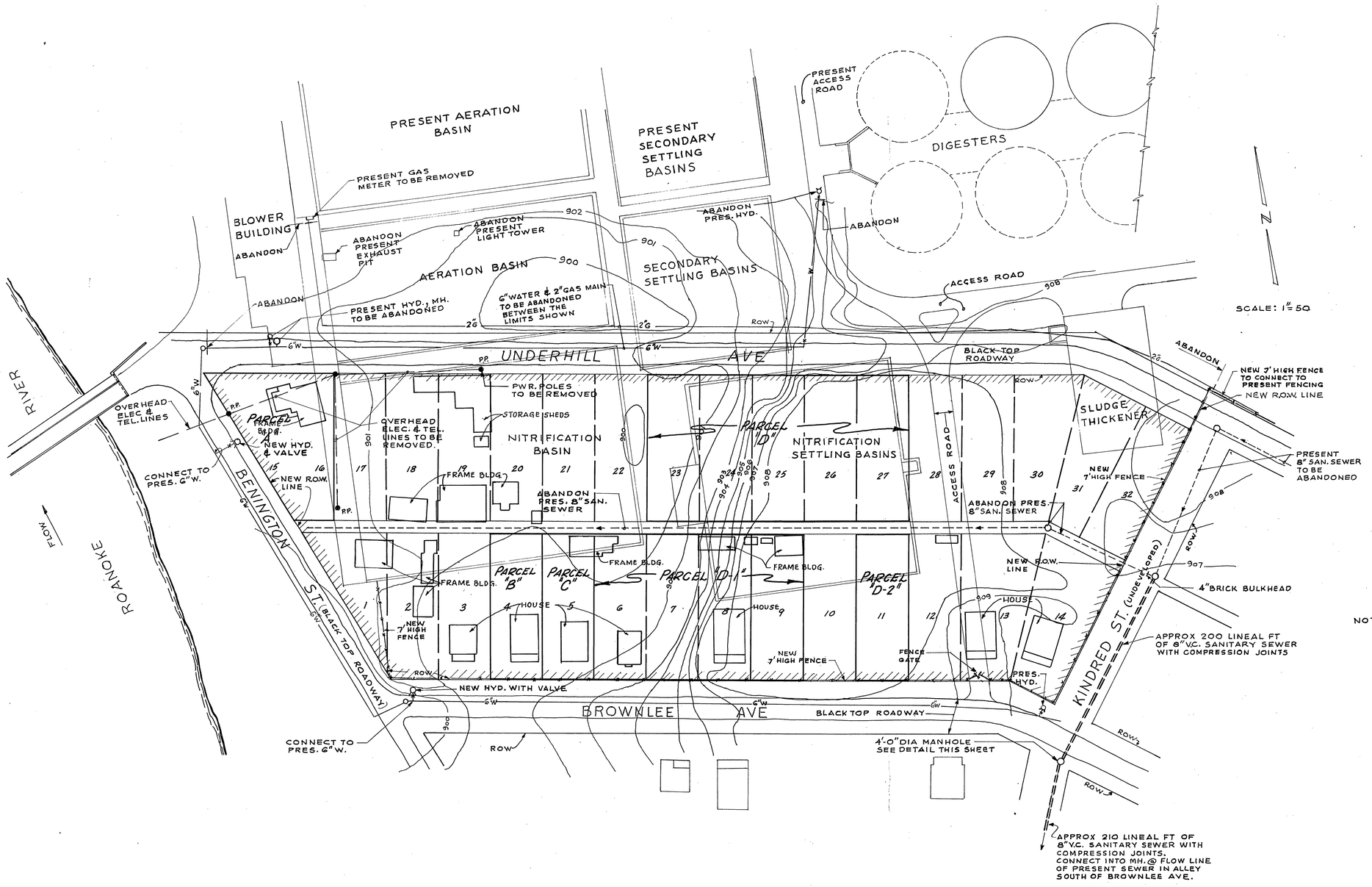

DEMOLITION PLAN

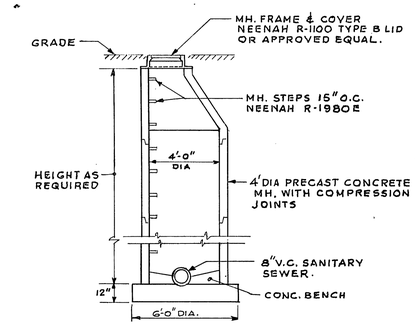

DETAIL OF MANHOLE
SCALE: 1/4" = 1'-0"

NOTE. 1. ALL STRUCTURES UTILITIES, POWER POLES (P.P.) E.T.C. WITHIN THE CROSSHATCHED AREA SHALL BE REMOVED.

2. HYDRANTS & VALVES TO BE FURNISHED AND INSTALLED IN ACCORDANCE WITH THE CITY OF ROANOKE WATER DEPT. REQUIREMENTS.

3

ADDITIONS TO SEWAGE TREATMENT PLANT
ROANOKE, VIRGINIA

SITE DEVELOPMENT
DEMOLITION

ALVORD, BURDICK & HOWSON
ENGINEERS CHICAGO

1972