NOTES:

1. PROVIDE 1 TON SST LIFTING EYE ABOVE EACH PUMP, AND ABOVE THE HATCH IN THE ELECTRICAL ROOM.
2. LAYOUT DIMENSIONS AND ELEVATIONS SHOWN ARE REPRESENTATIVE OF EQUIPMENT SUPPLIED BY ONE MANUFACTURER OF EACH TYPE OF PROCESS EQUIPMENT. ANY COST FOR REDESIGN, MATERIALS OR CONSTRUCTION DUE TO THE REQUIREMENTS OF THE EQUIPMENT ULTIMATELY FURNISHED SHALL BE THE RESPONSIBILITY OF THE CONTRACTOR.

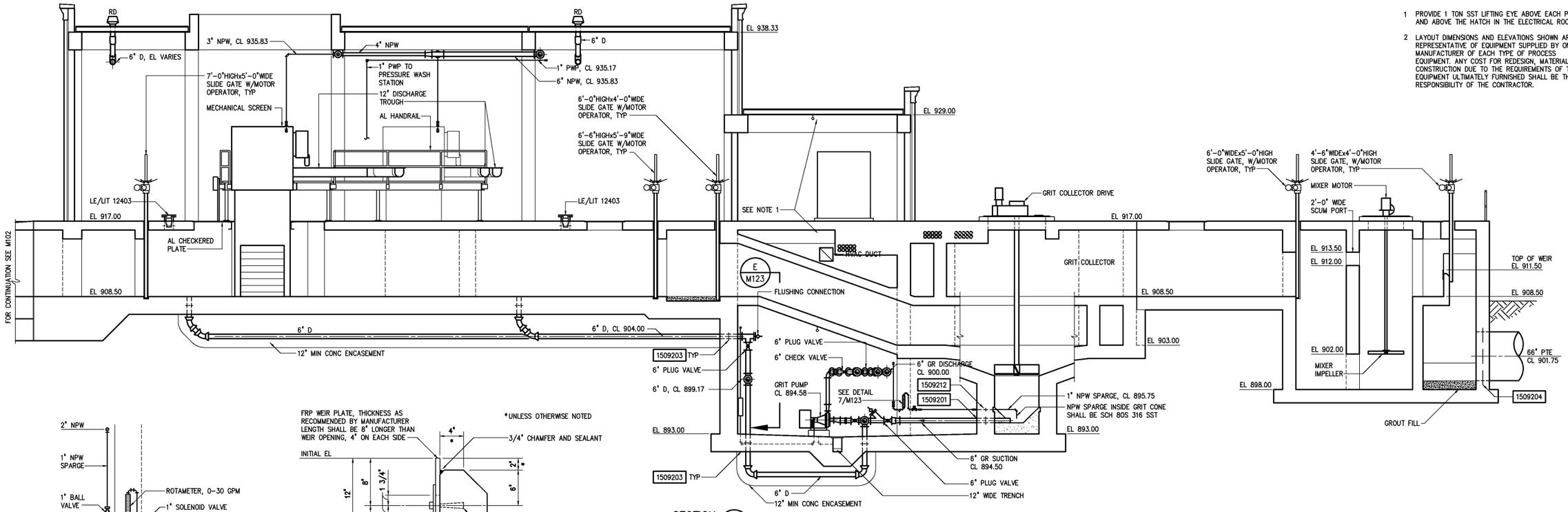

SECTION A / M120
3/16"=1'-0"

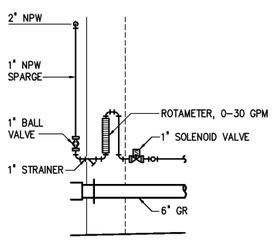

NPW SPARGE
DETAIL 7 / M123
3/8"=1'-0"

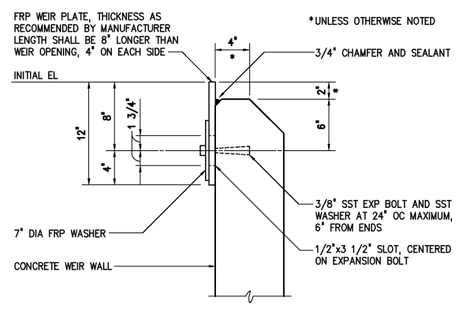

WEIR PLATE
DETAIL 6 / M123
NTS

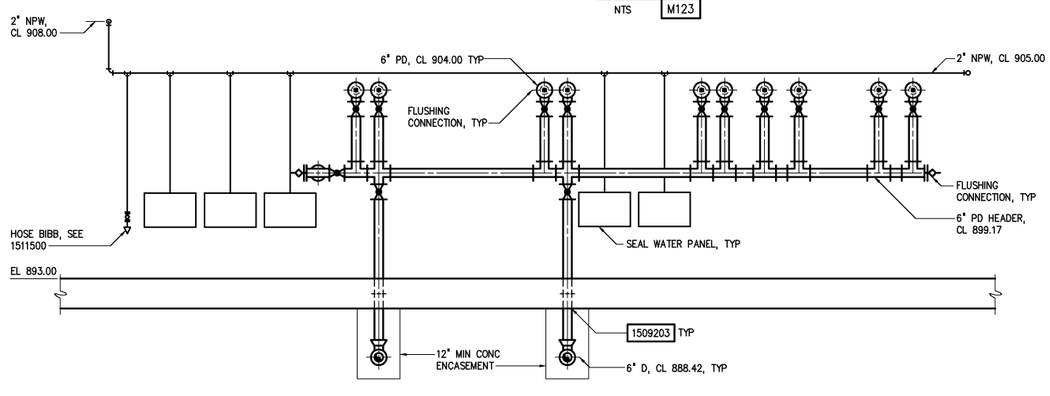

SECTION E / M123
1/4"=1'-0"

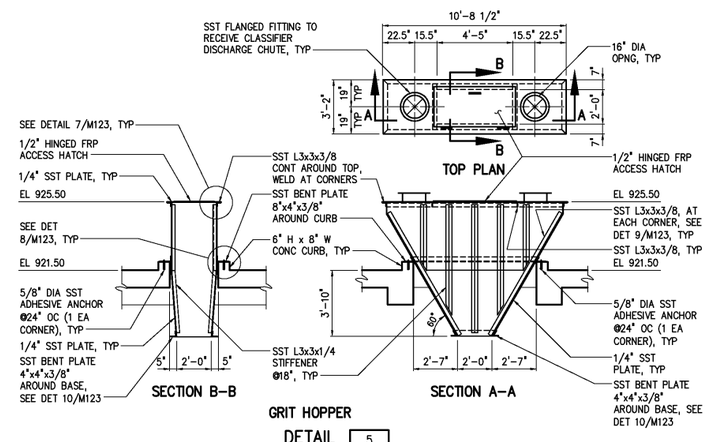

GRIT HOPPER
DETAIL 5 / M122
1/4"=1'-0"

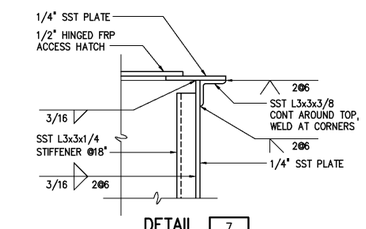

DETAIL 7
1 1/2"=1'-0" / M123

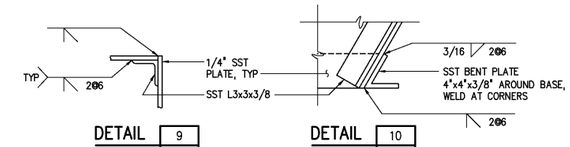

DETAIL 9 / M123
1 1/2"=1'-0"

DETAIL 10 / M123
1 1/2"=1'-0"

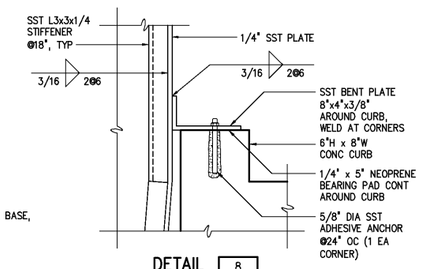

DETAIL 8 / M123
1 1/2"=1'-0"

NO.	ISSUED FOR	DATE	BY
	RECORD DRAWINGS	MAR 2008	RLT
	CONSTRUCTION	MAR 2004	RLT
	REGULATORY APPROVAL	NOV 2003	RLT
	PRELIMINARY DESIGN	NOV 2002	RLT

DESIGNED DAN
DRAWN BRC
CHECKED
PROJ. ENGR. DAN
APPROVED

THIS DOCUMENT ORIGINALLY ISSUED FOR CONSTRUCTION AND SEALED BY ROBERT S. DIFIORE, SEAL NO. 22769

THIS DOCUMENT ORIGINALLY ISSUED FOR CONSTRUCTION AND SEALED BY RONALD L. TAYLOR, SEAL NO. 024649

RECORD DRAWING

THIS DRAWING HAS BEEN MODIFIED TO REFLECT FIELD CHANGES REPORTED BY THE CONTRACTOR OR ANOTHER PARTY, BUT NOT VERIFIED BY THE CERTIFYING ENGINEER. THIS DOCUMENT ORIGINALLY ISSUED AND SEALED BY DAVID A. NAILOR, 025465. THIS MEDIA SHALL NOT BE CONSIDERED A CERTIFIED DOCUMENT.

HAZEN AND SAWYER
Environmental Engineers & Scientists
4011 WestChase Blvd, Raleigh, North Carolina 27607

CITY OF ROANOKE
VIRGINIA

REGIONAL WATER POLLUTION CONTROL PLANT
WET WEATHER IMPROVEMENTS

PRELIMINARY TREATMENT FACILITIES
MECHANICAL
SECTIONS AND DETAILS

THE SCALE BAR SHOWN BELOW MEASURES ONE INCH LONG ON THE ORIGINAL DRAWING.

DATE JULY 2003
H & S JOB NUMBER 30788A
CONTRACT NUMBER A
DRAWING NUMBER M123

PLOT DATE 07/09/03 8:22am FILE= H:\30788\30788A\MECH\m123 by RBATCHELOR XREF(s)=30788d\mlec\30786tb, 100\p-e01, 120\pt-e01, 120\PT-M-S02, 120\PT-M-DC, 1517405,