NOTES:

1. C10 INDICATES AL C10x6.136.
2. * INDICATES CONTRACTOR SHALL COORDINATE INDICATED DIMENSION WITH MECHANICAL SCREEN MANUFACTURER. PLATFORM SHALL BE FABRICATED SUCH THAT A MAXIMUM GAP OF 1" EXISTS BETWEEN THE EDGE OF PLATFORM AND MECHANICAL SCREEN.
3. ** INDICATES CROSS-BRACING TO BE PROVIDED BETWEEN L4x4x3/8 COLUMNS AS SHOWN IN SECTIONS J/S128, K/S129 AND L/S129.

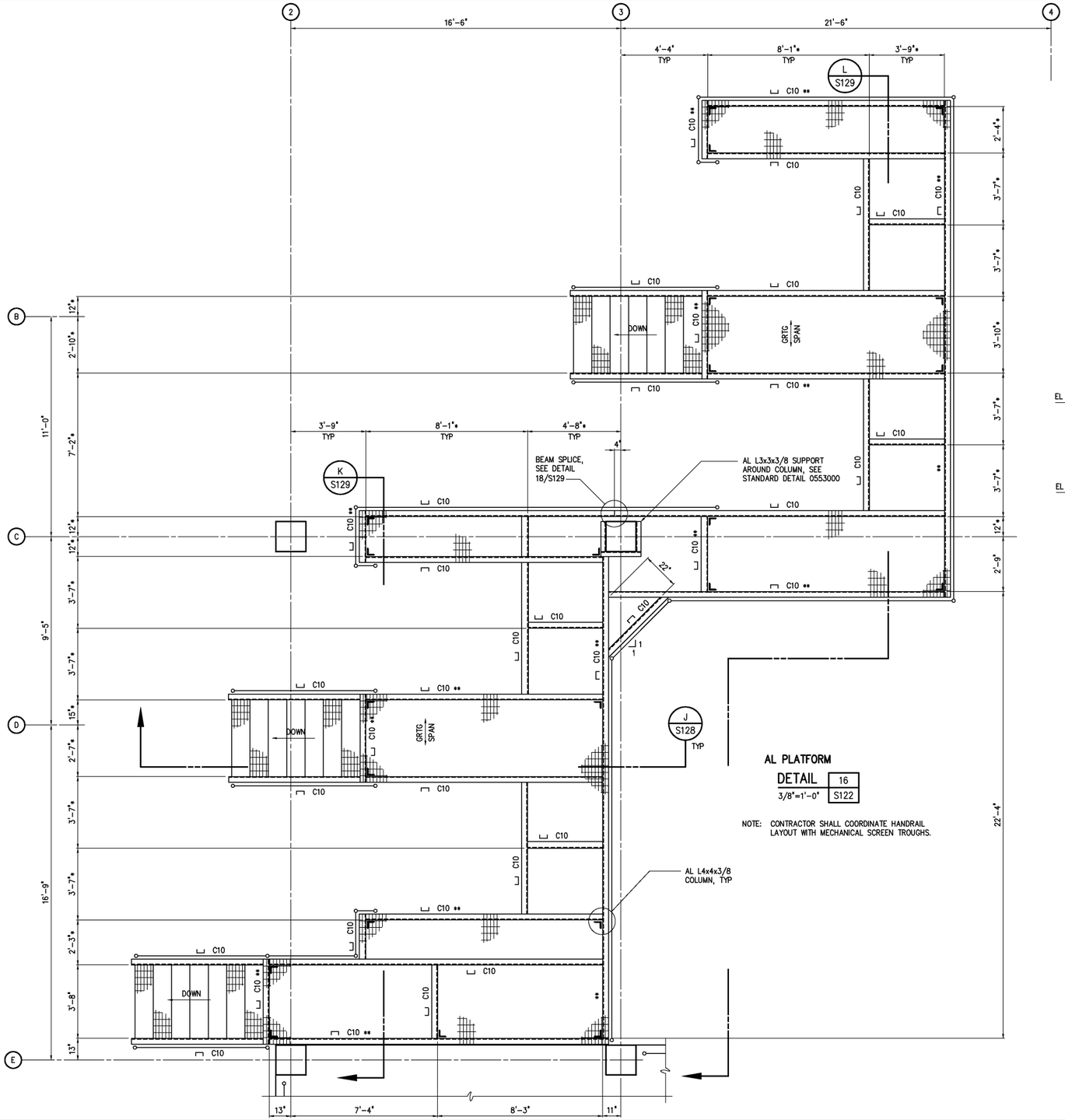

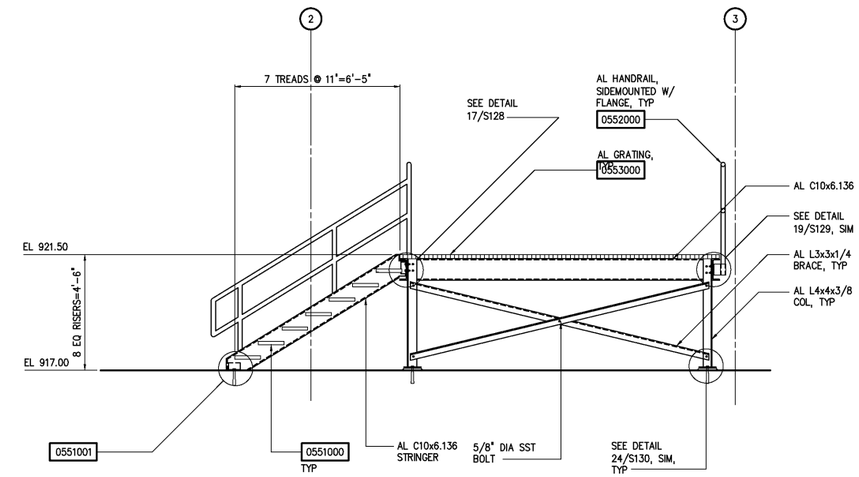

SECTION J/S128
3/8"=1'-0"

AL PLATFORM
DETAIL 16/S122
3/8"=1'-0"

NOTE: CONTRACTOR SHALL COORDINATE HANDRAIL LAYOUT WITH MECHANICAL SCREEN TROUGHS.

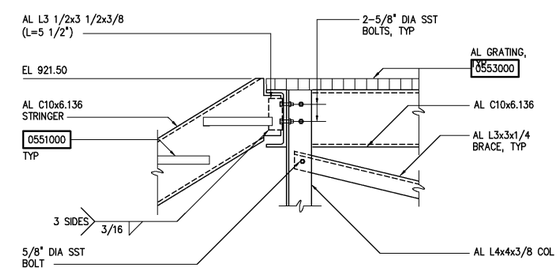

DETAIL 17/S128
1"=1'-0"

NO.	ISSUED FOR	DATE	BY
	RECORD DRAWINGS	MAR 2008	RLT
	CONSTRUCTION	MAR 2004	RLT
	REGULATORY APPROVAL	NOV 2003	RLT
	PRELIMINARY DESIGN	NOV 2002	RLT

DESIGNED WGL/ARH
DRAWN ARH
CHECKED
PROJ. ENGR. DAN
APPROVED

THIS DOCUMENT ORIGINALLY ISSUED FOR CONSTRUCTION AND SEALED BY ROBERT S. DIFIORE, SEAL NO. 22769

THIS DOCUMENT ORIGINALLY ISSUED FOR CONSTRUCTION AND SEALED BY RONALD L. TAYLOR, SEAL NO. 024649

RECORD DRAWING

THIS DRAWING HAS BEEN MODIFIED TO REFLECT FIELD CHANGES REPORTED BY THE CONTRACTOR OR ANOTHER PARTY, BUT NOT VERIFIED BY THE CERTIFYING ENGINEER. THIS DOCUMENT ORIGINALLY ISSUED AND SEALED BY CHRISTOPHER T. PHILLIPS, 033796. THIS MEDIA SHALL NOT BE CONSIDERED A CERTIFIED DOCUMENT.

HAZEN AND SAWYER
Environmental Engineers & Scientists
4011 WestChase Blvd, Raleigh, North Carolina 27607

CITY OF ROANOKE
VIRGINIA

REGIONAL WATER POLLUTION CONTROL PLANT
WET WEATHER IMPROVEMENTS

PRELIMINARY TREATMENT FACILITIES
STRUCTURAL
SECTIONS AND DETAILS

THE SCALE BAR SHOWN BELOW MEASURES ONE INCH LONG ON THE ORIGINAL DRAWING.

DATE JULY 2003
H & S JOB NUMBER 30788A
CONTRACT NUMBER A
DRAWING NUMBER S128

PLOT DATE 07/08/03 11:59am FILE= H:\30788\30788A\STRU\s128 by DZMPEL XREF=30788a\mlsc\30788tb, 120\pt-s-de, 120\pt-s-s03,