NOTES:

1. CONTRACTOR SHALL COORDINATE SIZE OF OPENING IN INTERIOR WALL WITH EQUIPMENT MANUFACTURER'S RECOMMENDATIONS.
2. WHERE THE CONTINUITY OF THE CHANNEL WALL IS INTERRUPTED BY A SELF-CONTAINED SLIDE GATE THE CONTRACTOR SHALL SUPPORT GRATING WITH AN ALUMINUM ANGLE AS SHOWN. CONTRACTOR SHALL VERIFY LENGTH OF ALUMINUM ANGLE WITH MANUFACTURES RECOMMENDATIONS FOR GATE WIDTH SUCH THAT A MINIMUM OF 3 1/2" EXISTS BETWEEN THE CENTER OF ANCHOR BOLTS AND THE EDGE OF CONCRETE WALL. ALUMINUM ANGLE BOLTED TO CONCRETE WALL SHALL ONLY BE USED AT THE LOCATIONS OF SELF-CONTAINED SLIDE GATES. AT ALL OTHER LOCATIONS ALUMINUM GRATING SHALL BE SUPPORTED USING AN EXTRUDED CONTINUOUS ALUMINUM FRAME EMBEDED IN CONCRETE AS SHOWN IN STANDARD DETAIL 0553000.
3. CONTRACTOR SHALL COORDINATE RADIUS OF CONC FILL AND DIMENSIONS OF 1 1/2" NOTCH WITH EQUIPMENT MANUFACTURERS RECOMMENDATIONS.

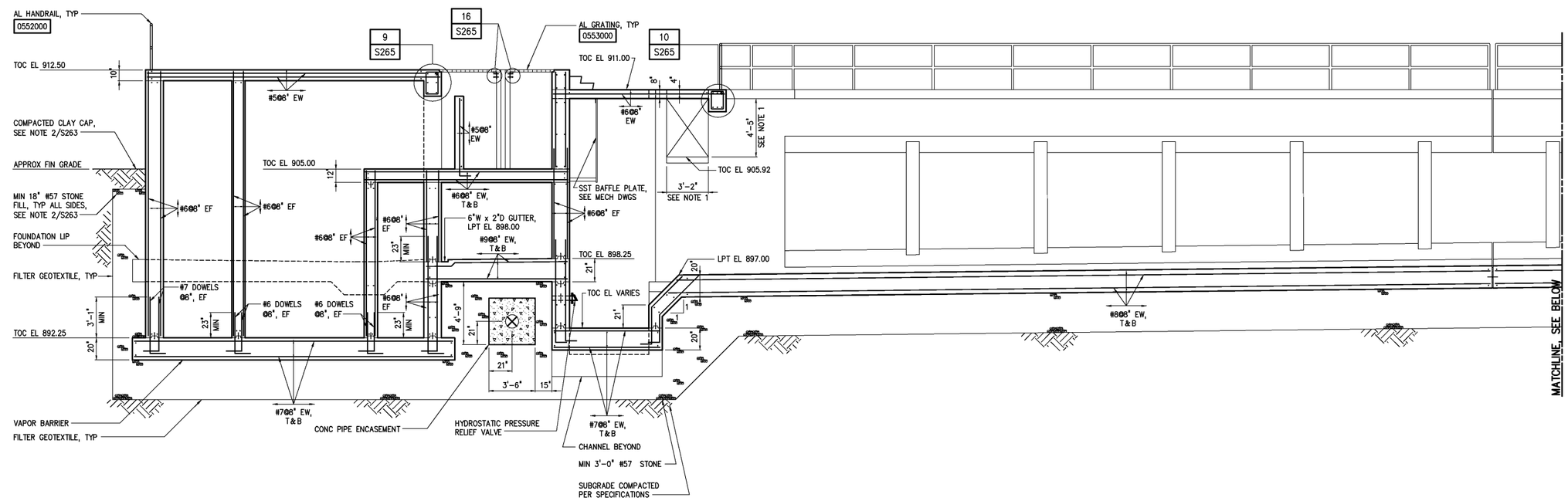

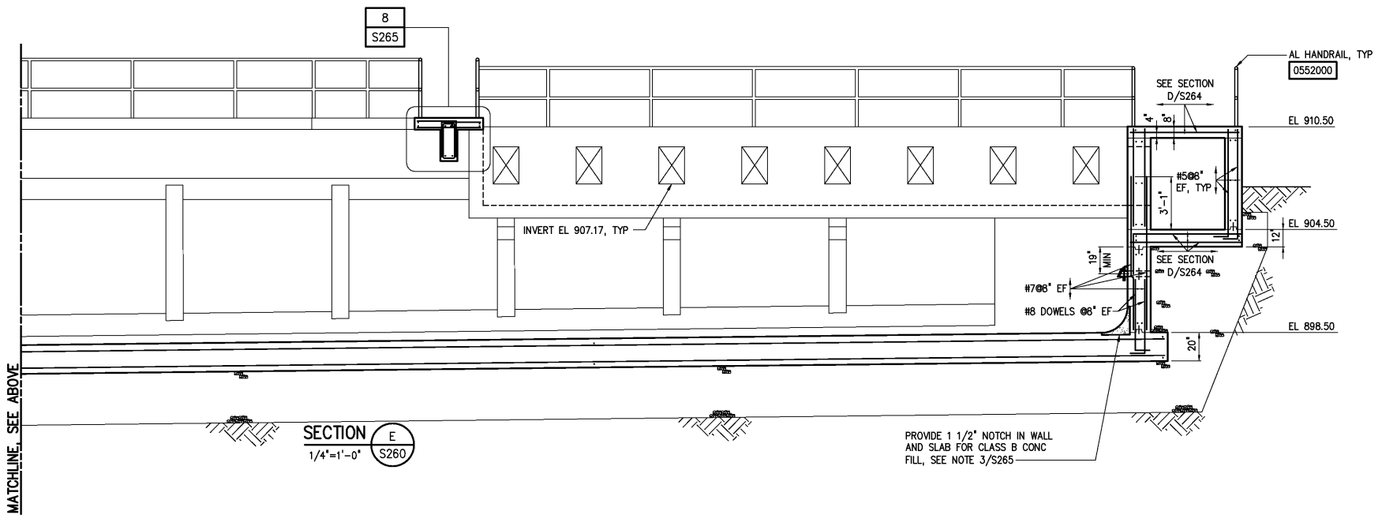

SECTION E S260
1/4"=1'-0"

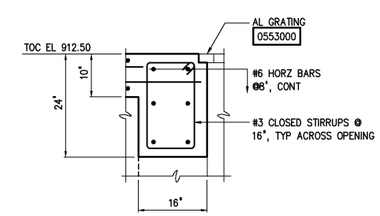

DETAIL 9 S265
3/4"=1'-0"

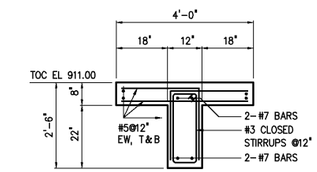

DETAIL 8 S265
1/2"=1'-0"

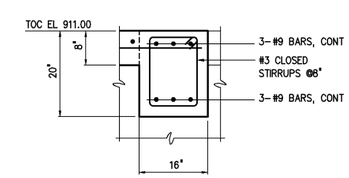

DETAIL 10 S265
3/4"=1'-0"

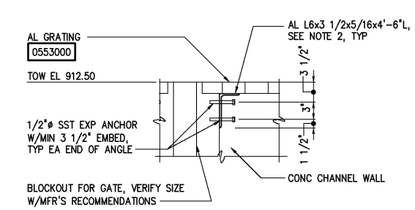

DETAIL 16 S265
1"=1'-0"

NO.	ISSUED FOR	DATE	BY
	RECORD DRAWINGS	MAR 2008	RLT
	CONSTRUCTION	MAR 2004	RLT
	REGULATORY APPROVAL	NOV 2003	RLT
	PRELIMINARY DESIGN	NOV 2002	RLT

APPROVED

DESIGNED AGM
DRAWN AGM
CHECKED
PROJ. ENGR. DAN

THIS DOCUMENT ORIGINALLY ISSUED FOR CONSTRUCTION AND SEALED BY ROBERT S. DIFIORE, SEAL NO. 22769

THIS DOCUMENT ORIGINALLY ISSUED FOR CONSTRUCTION AND SEALED BY RONALD L. TAYLOR, SEAL NO. 024649

RECORD DRAWING

THIS DRAWING HAS BEEN MODIFIED TO REFLECT FIELD CHANGES REPORTED BY THE CONTRACTOR OR ANOTHER PARTY, BUT NOT VERIFIED BY THE CERTIFYING ENGINEER. THIS DOCUMENT ORIGINALLY ISSUED AND SEALED BY CHRISTOPHER T. PHILLIPS, 033796. THIS MEDIA SHALL NOT BE CONSIDERED A CERTIFIED DOCUMENT.

HAZEN AND SAWYER
Environmental Engineers & Scientists
4011 WestChase Blvd, Raleigh, North Carolina 27607

CITY OF ROANOKE
VIRGINIA

REGIONAL WATER POLLUTION CONTROL PLANT
WET WEATHER IMPROVEMENTS

PRIMARY CLARIFIER NOS 7 - 9
STRUCTURAL
SECTION AND DETAILS

THE SCALE BAR SHOWN BELOW MEASURES ONE INCH LONG ON THE ORIGINAL DRAWING.

DATE JULY 2003
H & S JOB NUMBER 30788A
CONTRACT NUMBER A
DRAWING NUMBER S265

PLOT DATE 07/08/03 12:01pm FILE= H:\30788\30788A\STRU\s265 by DZMPEL XREFs=30788d\misc\30786tb, 260\pc-e05, 260\pc-pb,