NOTES:

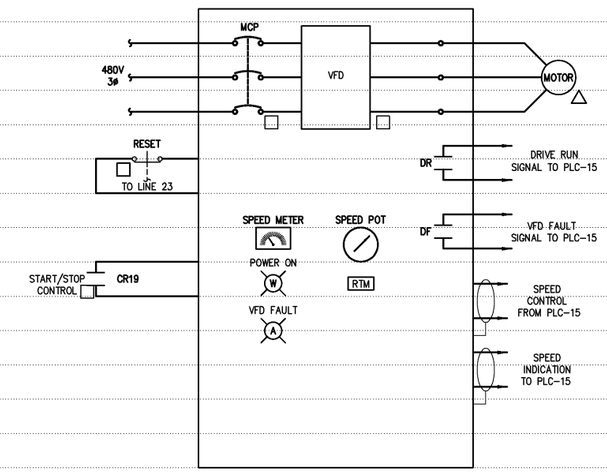

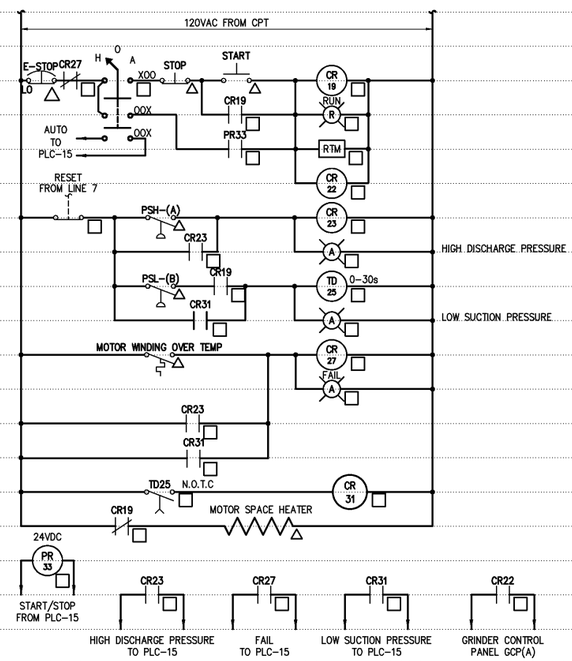

PRIMARY SLUDGE PUMPS NO.1 – NO.8

ELEMENTARY CONTROL SCHEMATIC

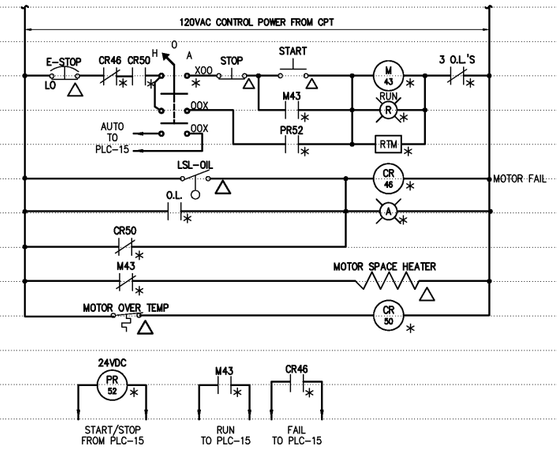

SCUM RECIRCULATOR PUMP NO. 1 & NO. 2

ELEMENTARY CONTROL SCHEMATIC

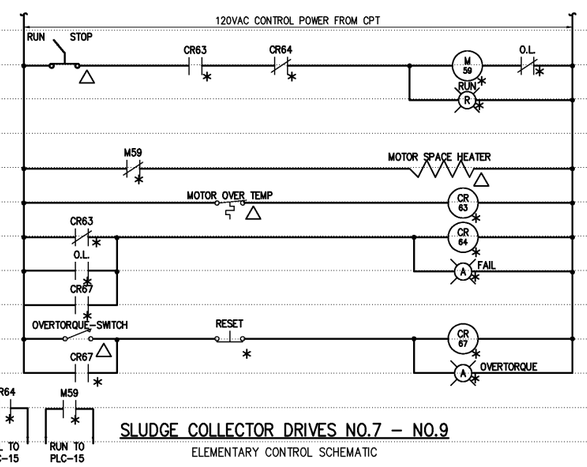

SLUDGE COLLECTOR DRIVES NO.7 – NO.9

ELEMENTARY CONTROL SCHEMATIC

PRIMARY SLUDGE PUMP	PSH-(A)	PSL-(B)	GRINDER CONTROL PANEL GCP(A)
NO.1	PSH-22402	PSL-22401	GCP-1
NO.2	PSH-22404	PSL-22403	GCP-2
NO.3	PSH-22406	PSL-22405	GCP-3
NO.4	PSH-22408	PSL-22407	GCP-4
NO.5	PSH-26402	PSL-26401	GCP-5
NO.6	PSH-26404	PSL-26403	GCP-6
NO.7	PSH-26406	PSL-26405	GCP-7
NO.8	PSH-26408	PSL-26407	GCP-8

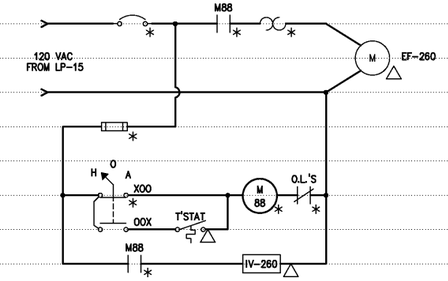

EF-260 MOTOR STARTER

ELEMENTARY CONTROL SCHEMATIC

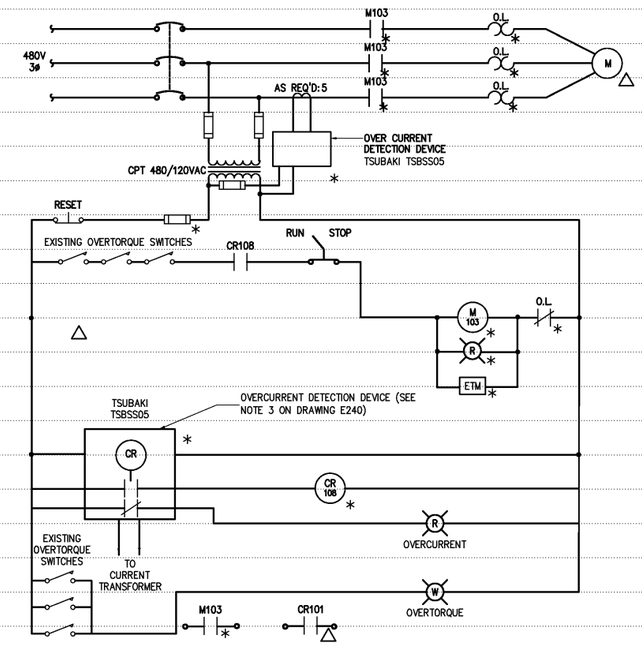

PRIMARY CLARIFIER SLUDGE COLLECTOR NO.4–NO.6 MOTOR CONTROLLER

ELEMENTARY CONTROL SCHEMATIC

NO.	ISSUED FOR	DATE	BY
	RECORD DRAWINGS	MAR 2008	RLT
	CONSTRUCTION	MAR 2004	RLT
	REGULATORY APPROVAL	NOV 2003	RLT
	PRELIMINARY DESIGN	NOV 2002	RLT

DESIGNED BRL
DRAWN BRL
CHECKED
PROJ. ENGR. DAN
APPROVED

THIS DOCUMENT ORIGINALLY ISSUED FOR CONSTRUCTION AND SEALED BY ROBERT S. DIFIORE, SEAL NO. 22769

THIS DOCUMENT ORIGINALLY ISSUED FOR CONSTRUCTION AND SEALED BY RONALD L. TAYLOR, SEAL NO. 024649

RECORD DRAWING

THIS DRAWING HAS BEEN MODIFIED TO REFLECT FIELD CHANGES REPORTED BY THE CONTRACTOR OR ANOTHER PARTY, BUT NOT VERIFIED BY THE CERTIFYING ENGINEER. THIS DOCUMENT ORIGINALLY ISSUED AND SEALED BY GERALD J. RATASKY, 026535. THIS MEDIA SHALL NOT BE CONSIDERED A CERTIFIED DOCUMENT.

HAZEN AND SAWYER
Environmental Engineers & Scientists
4011 WestChase Blvd, Raleigh, North Carolina 27607

CITY OF ROANOKE
VIRGINIA

REGIONAL WATER POLLUTION CONTROL PLANT
WET WEATHER IMPROVEMENTS

PRIMARY CLARIFIER NOS 7-9 MODIFICATIONS
ELECTRICAL
ELEMENTARY CONTROL SCHEMATICS

THE SCALE BAR SHOWN BELOW MEASURES ONE INCH LONG ON THE ORIGINAL DRAWING.

DATE JULY 2003
H & S JOB NUMBER 30788A
CONTRACT NUMBER A
DRAWING NUMBER E265

PLOT DATE 07/09/03 12:16pm FILE= H:\30788\30788A\ELEC\e263 by BUSK XREF= 30788s\xrlec\30789lb,