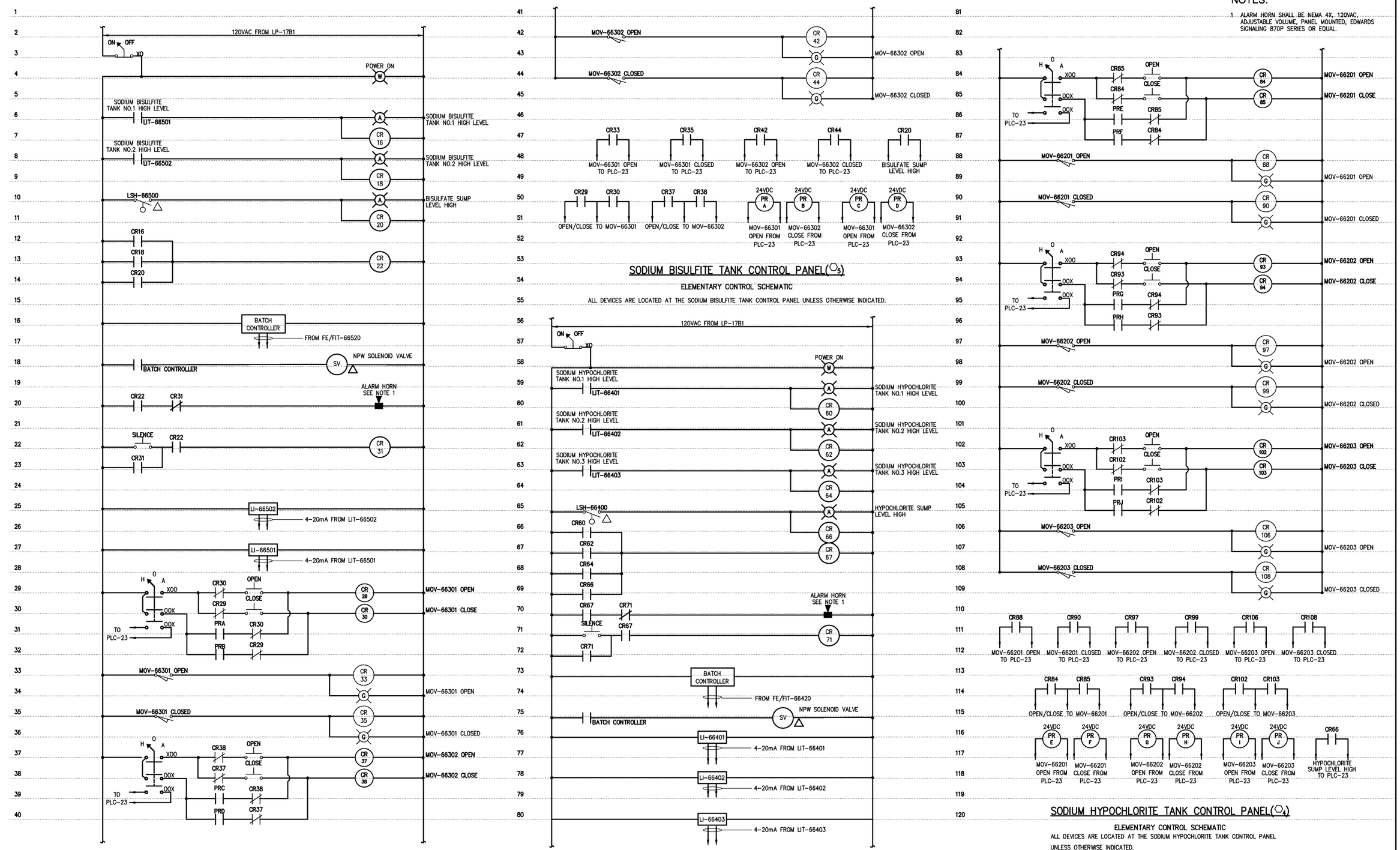


NOTES:

1. ALARM HORN SHALL BE NEMA 4X, 120VAC, ADJUSTABLE VOLUME, PANEL MOUNTED, EDWARDS SIGNALING 870P SERIES OR EQUAL.

| NO. | ISSUED FOR | DATE | BY |
|---|---|---|---|
| | RECORD DRAWINGS | MAR 2008 | RLT |
| | CONSTRUCTION | MAR 2004 | RLT |
| | REGULATORY APPROVAL | NOV 2003 | RLT |
| | PRELIMINARY DESIGN | NOV 2002 | RLT |

DESIGNED BRL
DRAWN BRL
CHECKED
PROJ. ENGR. H & S
APPROVED

THIS DOCUMENT ORIGINALLY ISSUED FOR CONSTRUCTION AND SEALED BY ROBERT S. DIFIORE, SEAL NO. 22769

THIS DOCUMENT ORIGINALLY ISSUED FOR CONSTRUCTION AND SEALED BY RONALD L. TAYLOR, SEAL NO. 024649

RECORD DRAWING

THIS DRAWING HAS BEEN MODIFIED TO REFLECT FIELD CHANGES REPORTED BY THE CONTRACTOR OR ANOTHER PARTY, BUT NOT VERIFIED BY THE CERTIFYING ENGINEER. THIS DOCUMENT ORIGINALLY ISSUED AND SEALED BY GERALD J. RATASKY, 026535. THIS MEDIA SHALL NOT BE CONSIDERED A CERTIFIED DOCUMENT.

HAZEN AND SAWYER
Environmental Engineers & Scientists
4011 WestChase Blvd, Raleigh, North Carolina 27607

CITY OF ROANOKE
VIRGINIA

REGIONAL WATER POLLUTION CONTROL PLANT
WET WEATHER IMPROVEMENTS

DISINFECTION CHEMICAL FEED FACILITIES
ELECTRICAL
ELEMENTARY CONTROL SCHEMATICS

THE SCALE BAR SHOWN BELOW MEASURES ONE INCH LONG ON THE ORIGINAL DRAWING.

DATE JULY 2003
H & S JOB NUMBER 30788A
CONTRACT NUMBER A
DRAWING NUMBER E663

PLOT DATE 07/09/03 12:20pm FILE= H:\30788\30788A\ELEC\e663 by BLISK XREF=30788a\vmisc\30786tb,