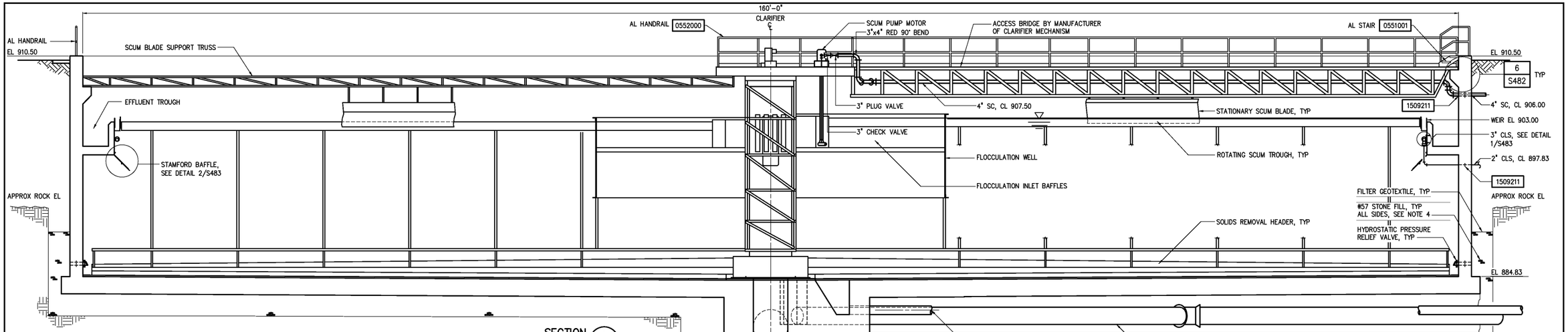

SECTION A S480
3/16"=1'-0"

NOTES: 1 SEE BOTTOM PLAN ON DWG S480 FOR PROPER PIPE ORIENTATION.

2 REINFORCEMENT NOT SHOWN FOR CLARITY.

EL 876.00

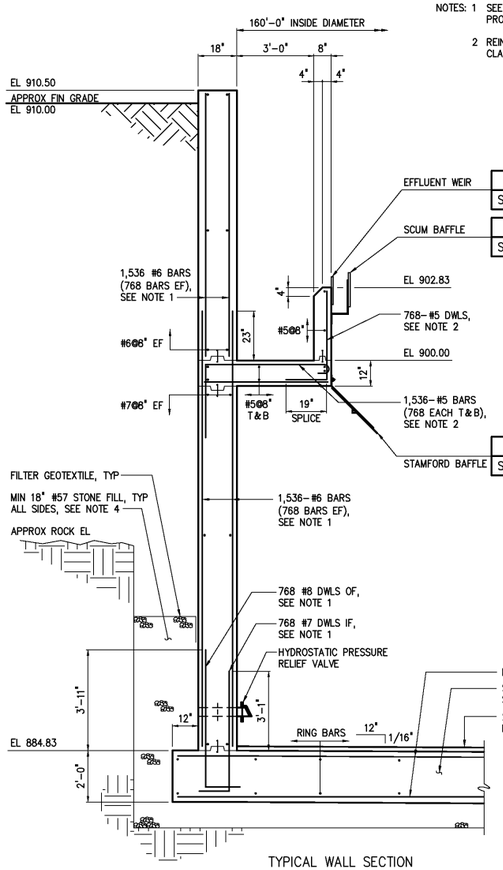

TYPICAL WALL SECTION

SECTION B S480
3/8"=1'-0"

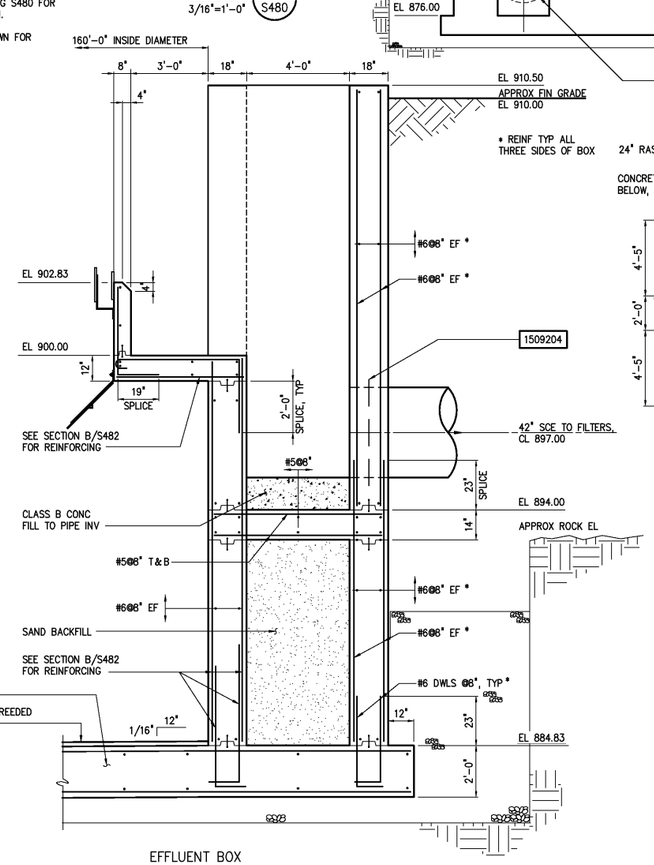

EFFLUENT BOX

SECTION C S480
3/8"=1'-0"

NOTE: DIMENSIONS SYMMETRICAL ABOUT CENTERLINE

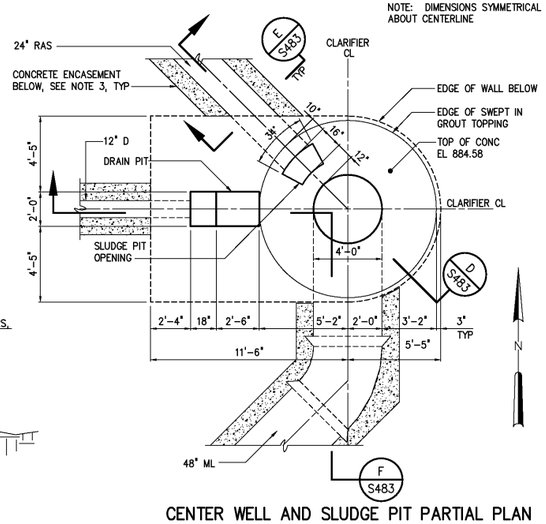

CENTER WELL AND SLUDGE PIT PARTIAL PLAN

1/4"=1'-0"

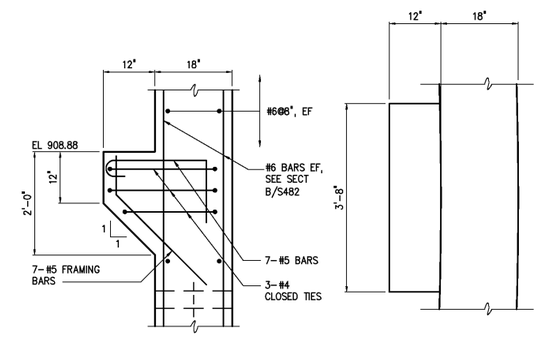

SIDE VIEW

PLAN VIEW

TYPICAL CORBEL DETAIL 6 S482
3/4"=1'-0"

1 1 FILTER GEOTEXTILE SHALL BE CONTINUOUS ALONG THE ENTIRE EXTENT OF EVACUATION BELOW BOTTOM MAT. FILTER GEOTEXTILE SHALL TURN UP ROCK FACE ON OUTSIDE OF EXCAVATION AND BE CONTINUOUS UP HEIGHT OF EXCAVATION TO 2'-0" ABOVE TOP OF WALL PRESSURE RELEF VALVE. FILTER GEOTEXTILE SHALL BE CONTINUOUS OVER STONE BACKFILL AND TERMINATE ADJACENT TO WALL OF STRUCTURE. FITLER GEOTEXTILE IS REQUIRE TO ISOLATE STONE BACKFILL AROUND ALL STRUCTURES CONTAINING PRESSURE RELIEF VALVES.

2 #7 DOWELS, #8 DOWELS AND #6 VERTICAL BARS SHALL BE EQUALLY SPACED AROUND PERIMETER OF CLARIFIER AND SHALL OCCUR AT LOCATIONS WHERE BOTTOM MAT RADIAL BARS INTERSECT WALL.

3 #5 BOTTOM BARS AND #5 DOWELS IN TROUGH SHALL BE PROVIDED AT EACH LOCATION WHERE VERTICAL BARS IN EXTERIOR WALL INTERSECT TROUGH SLAB.

4 ALL PIPING BELOW CLARIFIER TANK SHALL BE ENCASED IN CLASS "B" CONCRETE. ENCASEMENT SHALL BE A MINIMUM OF 12" THICK AROUND PIPE AND SHALL BE TIED INTO THE TOP MAT OF SLAB REINFORCEMENT AS SHOWN IN SECTION E/S483. ALL CONCRETE ENCASEMENTS SHALL EXTEND OUT TO OUTSIDE EDGE OF CONCRETE SLAB.

5 CONTRACTOR SHALL COORDINATE PLACEMENT OF BACKFILL AGAINST CLARIFIER WALLS WITH GEOTECHNICAL ENGINEER'S RECOMMENDATION TO ALLOW DRAINAGE OF GROUNDWATER TO PRESSURE RELIEF VALVES. SEE SHEET S480 FOR PRESSURE RELIEF VALVE LAYOUT AND REQUIREMENTS.

6 ALL EXPOSED SCUM PUMP DISCHARGE PIPING SHALL BE HEAT TRACED AND INSULATED.

NO.	ISSUED FOR	DATE	BY
3	AS BUILT	OCT 2007	RLT
2	CONSTRUCTION	MAR 2004	RLT
1	REGULATORY APPROVAL	NOV 2003	RLT

DESIGNED DAN/DDZ
DRAWN BRC/DDZ
CHECKED
PROJ. ENGR. DAN
APPROVED

THIS DOCUMENT ORIGINALLY ISSUED FOR CONSTRUCTION AND SEALED BY ROBERT S. DIFIORE, SEAL NO. 22769

THIS DOCUMENT ORIGINALLY ISSUED FOR CONSTRUCTION AND SEALED BY RONALD L. TAYLOR, SEAL NO. 024649

RECORD DRAWING

THIS DRAWING HAS BEEN MODIFIED TO REFLECT FIELD CHANGES REPORTED BY THE CONTRACTOR OR ANOTHER PARTY, BUT NOT VERIFIED BY THE CERTIFYING ENGINEER. THIS DOCUMENT ORIGINALLY ISSUED AND SEALED BY CHRISTOPHER T. PHILLIPS, 033796. THIS MEDIA SHALL NOT BE CONSIDERED A CERTIFIED DOCUMENT.

HAZEN AND SAWYER
Environmental Engineers & Scientists
4011 WestChase Blvd, Raleigh, North Carolina 27607

CITY OF ROANOKE
VIRGINIA

REGIONAL WATER POLLUTION CONTROL PLANT
PROCESS TRAIN IMPROVEMENTS

SECONDARY CLARIFIER NOS.17 AND 18

STRUCTURAL

SECTIONS AND DETAILS

THE SCALE BAR SHOWN BELOW MEASURES ONE INCH LONG ON THE ORIGINAL DRAWING.

DATE MARCH 2004
H & S JOB NUMBER 30788B
CONTRACT NUMBER B
DRAWING NUMBER S482

PLOT DATE 03/25/04 9:37am FILE= H:\30788\30788B\STRU\s482 by WLEADBITTER XREF=30788b\ymlec\30788ib, 480\nc-e01, 480\nc-e-e02, 480\nc-e-e03, 480\nc-bp, 480\nc-tp,