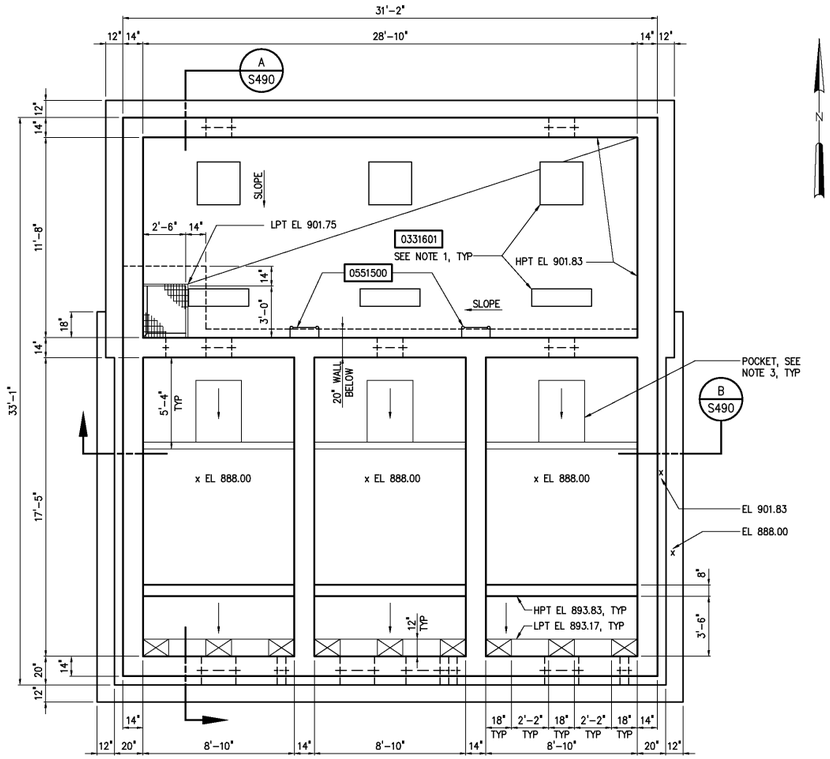

BOTTOM PLAN

1/4"=1'-0"

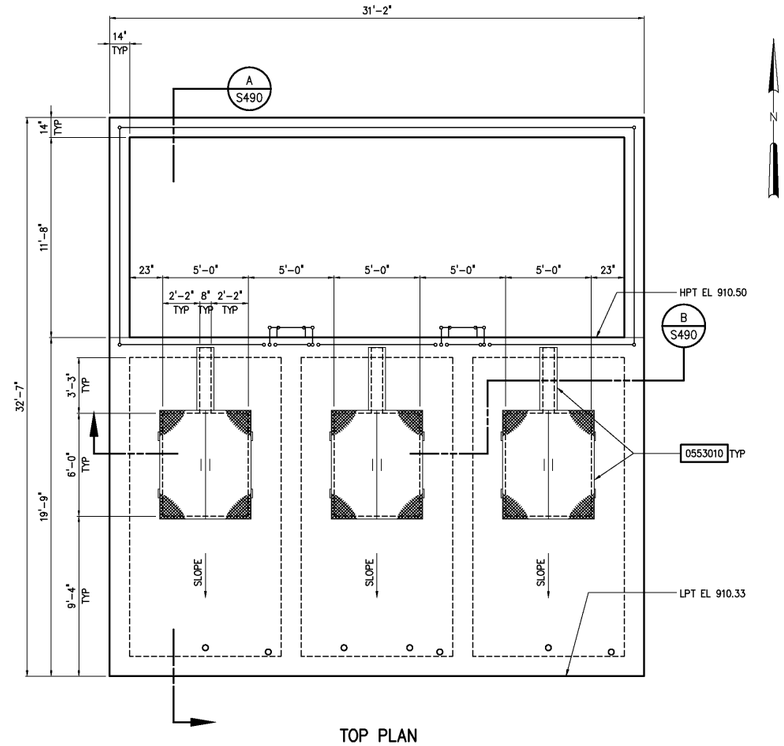

TOP PLAN

1/4"=1'-0"

NOTES:

1. COORDINATE WITH MECHANICAL DWGS FOR PIPE SUPPORT SIZE AND LOCATION.
2. PROVIDE EYE BOLTS ADJACENT TO EACH TRENCH AS SHOWN. EYE BOLTS SHALL BE ATTACHED TO THE SIDE OF THE SLAB AS SHOWN IN DETAIL 1/S490. ALLOWABLE LOAD FOR EYE BOLT SHALL BE 1 KIP.
3. CRYSTALLINE WATERPROOFING SHALL BE PROVIDED ON THE EXTERIOR FACE OF ALL WALLS THAT ACT AS A BARRIER BETWEEN DRY INHABITED SPACES AND BACKFILL. SEE SPECIFICATION SECTION 07100.
4. CONTRACTOR SHALL PLACE SLOPED CONCRETE FILL AS SHOWN LEAVING POCKET TO ALLOW FOR INSTALLATION OF RAS PUMP AND RAS DISCHARGE. UPON INSTALLATION OF PUMP AND DISCHARGE, CONTRACTOR SHALL FILL POCKET WITH CONCRETE FILL TO MATCH SLOPE OF ADJACENT FILL.

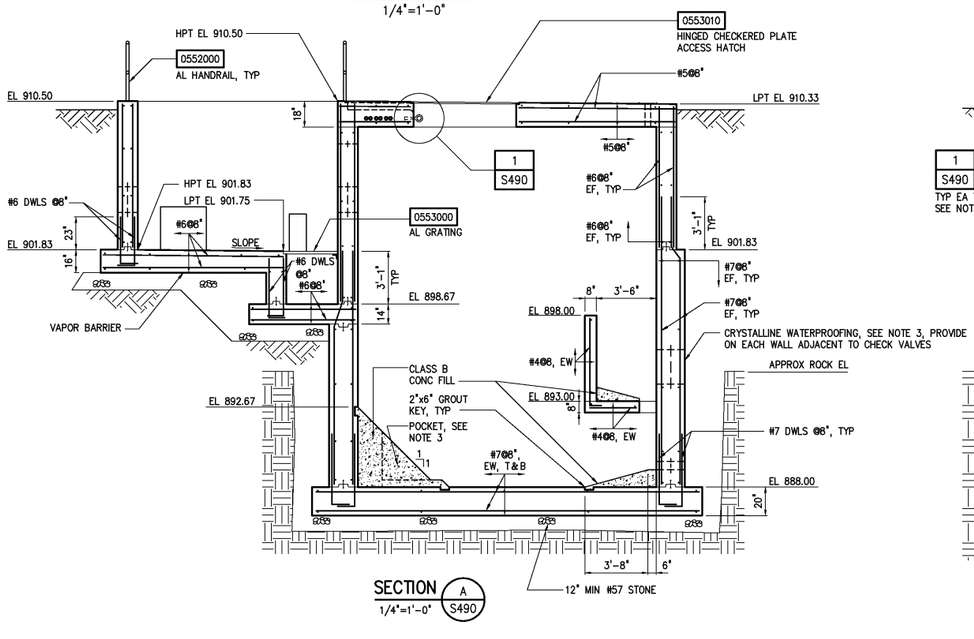

SECTION A S490

1/4"=1'-0"

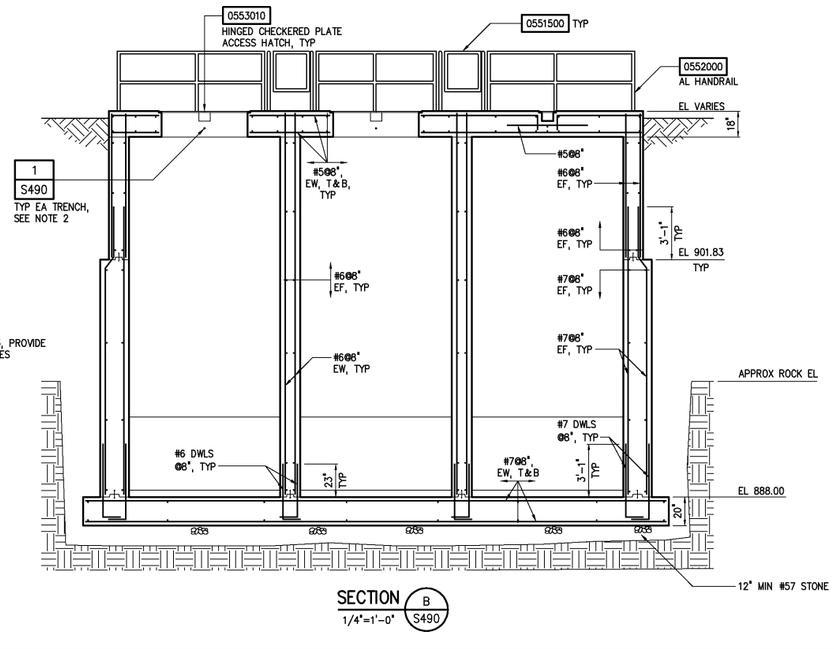

SECTION B S490

1/4"=1'-0"

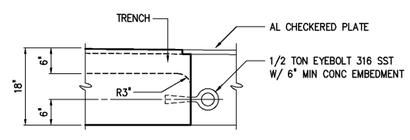

DETAIL 1 S490

3/4"=1'-0"

NO.	ISSUED FOR	DATE	BY
3	AS BUILT	OCT 2007	RLT
2	CONSTRUCTION	MAR 2004	RLT
1	REGULATORY APPROVAL	NOV 2003	RLT

DESIGNED WGL/HE
DRAWN HE
CHECKED
PROJ. ENGR. DAN
APPROVED

THIS DOCUMENT ORIGINALLY ISSUED FOR CONSTRUCTION AND SEALED BY ROBERT S. DIFIORE, SEAL NO. 22759

THIS DOCUMENT ORIGINALLY ISSUED FOR CONSTRUCTION AND SEALED BY RONALD L. TAYLOR, SEAL NO. 024649

RECORD DRAWING

THIS DRAWING HAS BEEN MODIFIED TO REFLECT FIELD CHANGES REPORTED BY THE CONTRACTOR OR ANOTHER PARTY, BUT NOT VERIFIED BY THE CERTIFYING ENGINEER. THIS DOCUMENT ORIGINALLY ISSUED AND SEALED BY CHRISTOPHER T. PHILLIPS, 033796. THIS MEDIA SHALL NOT BE CONSIDERED A CERTIFIED DOCUMENT.

HAZEN AND SAWYER
Environmental Engineers & Scientists
4011 WestChase Blvd, Raleigh, North Carolina 27607

CITY OF ROANOKE
VIRGINIA

REGIONAL WATER POLLUTION CONTROL PLANT
PROCESS TRAIN IMPROVEMENTS

RAS PUMP STATION B
STRUCTURAL
PLANS, SECTIONS AND DETAILS

THE SCALE BAR SHOWN BELOW MEASURES ONE INCH LONG ON THE ORIGINAL DRAWING.

DATE MARCH 2004
H & S JOB NUMBER 30788B
CONTRACT NUMBER B
DRAWING NUMBER S490

PLOT DATE 03/25/04 9:36am FILE= H:\30788\30788B\STRU\s490 by MLEADBITTER XREFs=30788b\pnlsc\30788tb, 490\vrp-pb, 490\vrp-pl, 490\vrp-a01, 490\vrp-a02,