NOTES:

1. CONCRETE PLACEMENT FOR EAST AND NORTH WALLS OF FILTER BYPASS ADJACENT TO EXISTING CHLORINE CONTACT TANKS SHALL TAKE PLACE WHILE FLUID LEVEL IN CHLORINE CONTACT TANKS IS AT NORMAL OPERATING LEVEL.
2. CONTRACTOR SHALL COORDINATE PLACEMENT OF BACKFILL AGAINST FILTER BYPASS WALLS WITH GEOTECHNICAL ENGINEER'S RECOMMENDATION TO ALLOW DRAINAGE OF GROUNDWATER TO PRESSURE RELIEF VALVES. SEE DRAWING S620 FOR PRESSURE RELIEF VALVE LAYOUT AND REQUIREMENTS.

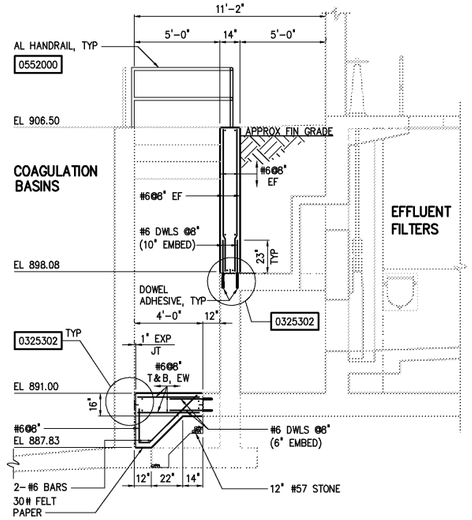

SECTION A / S620
1/4"=1'-0"

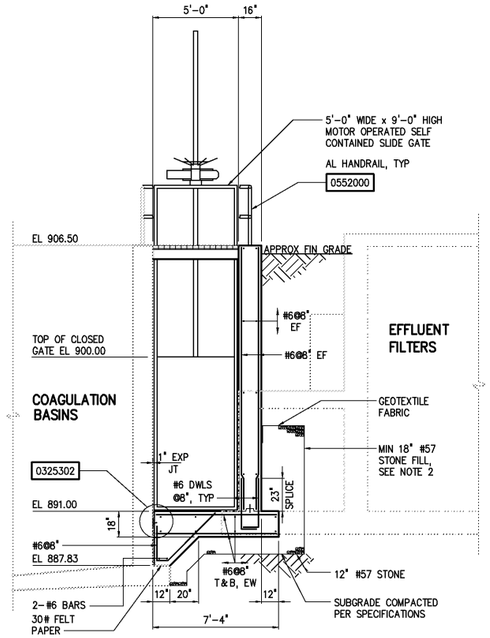

SECTION B / S620
1/4"=1'-0"

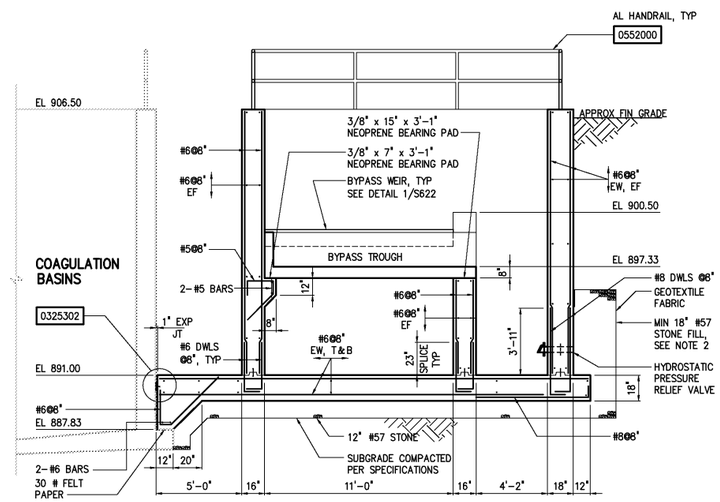

SECTION C / S620
1/4"=1'-0"

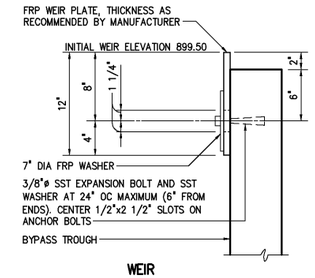

WEIR DETAIL 1 / S621
1 1/2"=1'-0"

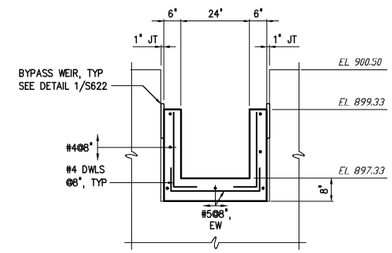

TYPICAL BYPASS TROUGH DETAIL 2 / S622
1/2"=1'-0"

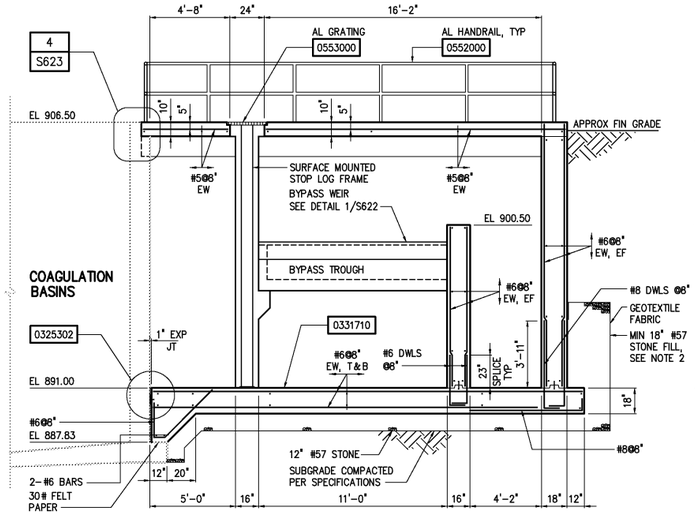

SECTION D / S620
1/4"=1'-0"

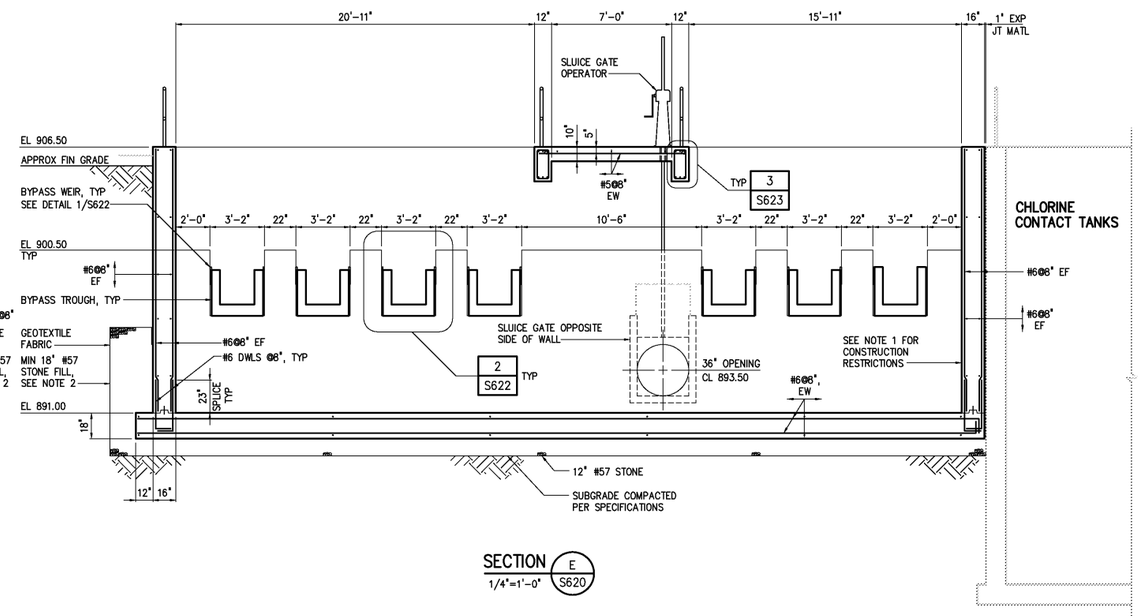

SECTION E / S620
1/4"=1'-0"

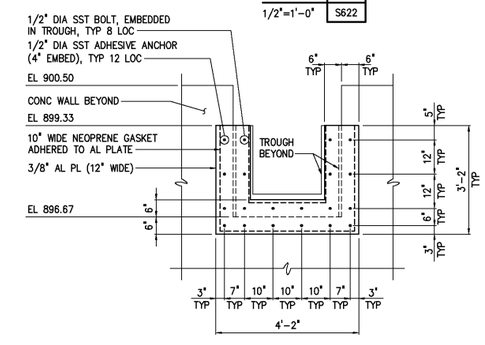

SECTION J / S621
1/2"=1'-0"

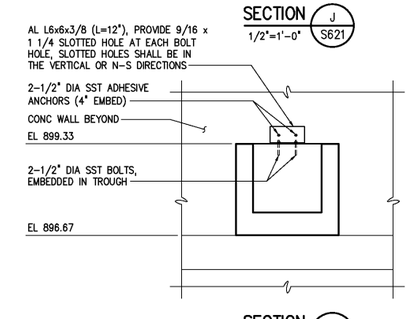

SECTION K / S621
1/2"=1'-0"

NO.	ISSUED FOR	DATE	BY
3	AS BUILT	OCT 2007	RLT
2	CONSTRUCTION	MAR 2004	RLT
1	REGULATORY APPROVAL	NOV 2003	RLT

DESIGNED WGL
DRAWN RWB/DDZ
CHECKED
PROJ. ENGR. DAN
APPROVED

THIS DOCUMENT ORIGINALLY ISSUED FOR CONSTRUCTION AND SEALED BY ROBERT S. DIFIORE, SEAL NO. 22769

THIS DOCUMENT ORIGINALLY ISSUED FOR CONSTRUCTION AND SEALED BY RONALD L. TAYLOR, SEAL NO. 024649

RECORD DRAWING

THIS DRAWING HAS BEEN MODIFIED TO REFLECT FIELD CHANGES REPORTED BY THE CONTRACTOR OR ANOTHER PARTY, BUT NOT VERIFIED BY THE CERTIFYING ENGINEER. THIS DOCUMENT ORIGINALLY ISSUED AND SEALED BY CHRISTOPHER T. PHILLIPS, 033796. THIS MEDIA SHALL NOT BE CONSIDERED A CERTIFIED DOCUMENT.

HAZEN AND SAWYER
Environmental Engineers & Scientists
4011 WestChase Blvd, Raleigh, North Carolina 27607

CITY OF ROANOKE
VIRGINIA

REGIONAL WATER POLLUTION CONTROL PLANT
PROCESS TRAIN IMPROVEMENTS

FILTER BYPASS
STRUCTURAL
SECTIONS AND DETAILS

THE SCALE BAR SHOWN BELOW MEASURES ONE INCH LONG ON THE ORIGINAL DRAWING.

DATE MARCH 2004
H & S JOB NUMBER 30788B
CONTRACT NUMBER B
DRAWING NUMBER S622

PLOT DATE 03/25/04 9:36am FILE= H:\30788\307888\STRU\s622 by WLEADBITTER XREF=30788b\misc\307861b, 620\bp-s01, 620\bp-s02, 620\bp-s03, 620\bp-s04, 620\bp-s05, 620\bp-m-da, 620\bp-s-da, 620\bp-s-db,