NOTES:

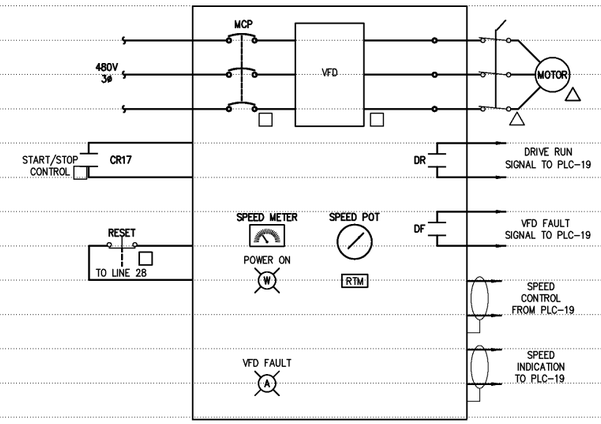

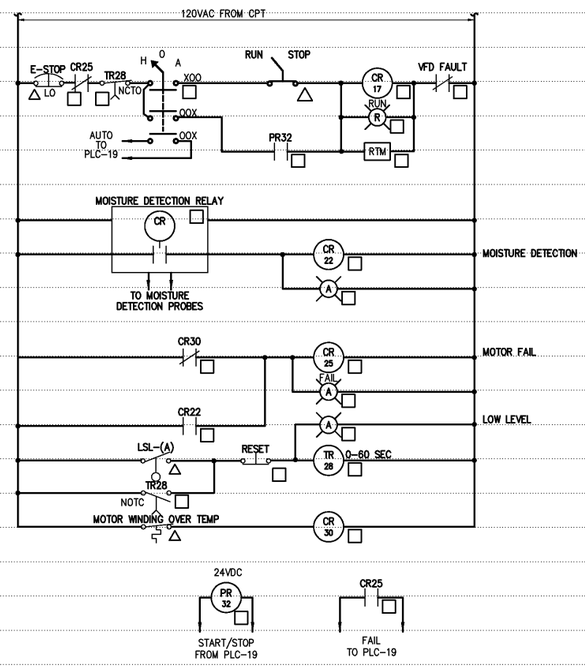

SECONDARY CLARIFIER RAS PUMPS NO.B1-NO.B3

ELEMENTARY CONTROL SCHEMATIC

SECONDARY CLARIFIER RAS PUMP	LSL-(A)
B1	LSL-49431
B2	LSL-49432
B3	LSL-49433

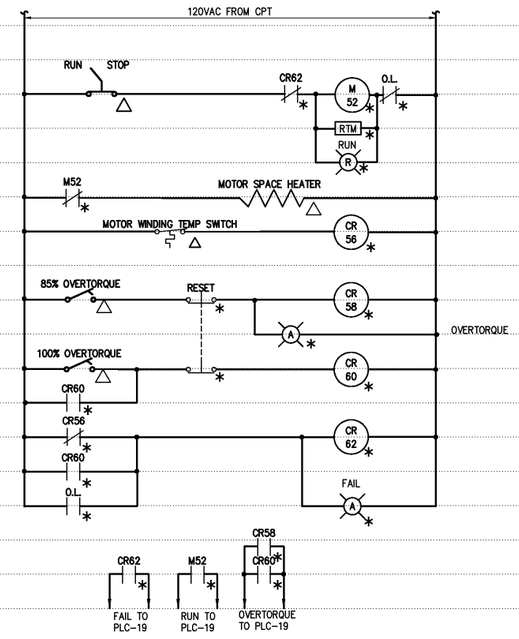

SECONDARY CLARIFIERS NO.17 AND NO.18 DRIVE UNITS

ELEMENTARY CONTROL SCHEMATIC

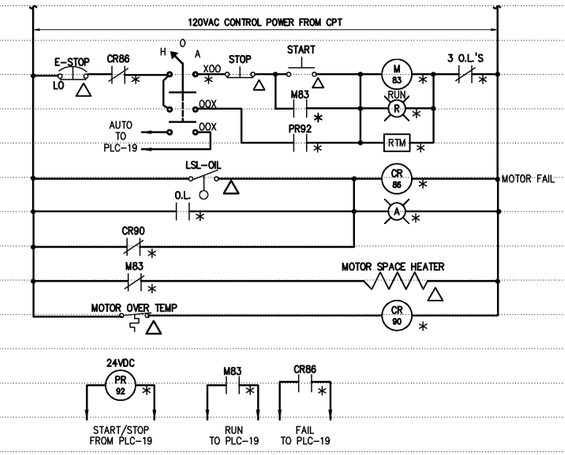

SCUM PUMP NO. 1 & NO. 2

ELEMENTARY CONTROL SCHEMATIC

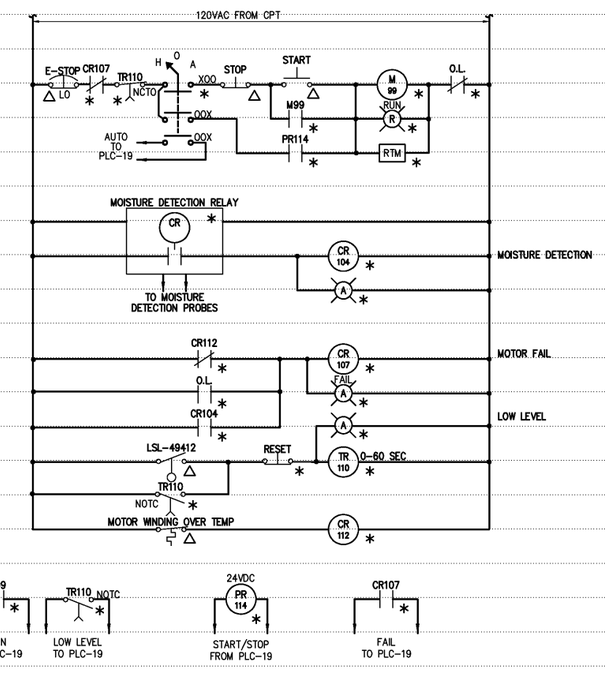

SECONDARY CLARIFIER NO.17 AND NO.18 DRAIN PUMP

ELEMENTARY CONTROL SCHEMATIC

NO.	ISSUED FOR	DATE	BY
3	AS BUILT	OCT 2007	RLT
2	CONSTRUCTION	MAR 2004	RLT
1	REGULATORY APPROVAL	NOV 2003	RLT

DESIGNED BRL
DRAWN BRL
CHECKED
PROJ. ENGR. H & S
APPROVED

THIS DOCUMENT ORIGINALLY ISSUED FOR CONSTRUCTION AND SEALED BY ROBERT S. DIFIORE, SEAL NO. 22769

THIS DOCUMENT ORIGINALLY ISSUED FOR CONSTRUCTION AND SEALED BY RONALD L. TAYLOR, SEAL NO. 024649

RECORD DRAWING

THIS DRAWING HAS BEEN MODIFIED TO REFLECT FIELD CHANGES REPORTED BY THE CONTRACTOR OR ANOTHER PARTY, BUT NOT VERIFIED BY THE CERTIFYING ENGINEER. THIS DOCUMENT ORIGINALLY ISSUED AND SEALED BY GERALD J. RATASKY, 026535. THIS MEDIA SHALL NOT BE CONSIDERED A CERTIFIED DOCUMENT.

HAZEN AND SAWYER
Environmental Engineers & Scientists
4011 WestChase Blvd, Raleigh, North Carolina 27607

CITY OF ROANOKE
VIRGINIA

REGIONAL WATER POLLUTION CONTROL PLANT
PROCESS TRAIN IMPROVEMENTS

RAS PUMP STATION B
ELECTRICAL
ELEMENTARY CONTROL SCHEMATICS AND
PANEL SCHEDULES

THE SCALE BAR SHOWN BELOW MEASURES ONE INCH LONG ON THE ORIGINAL DRAWING.

DATE MARCH 2004
H & S JOB NUMBER 30788B
CONTRACT NUMBER B
DRAWING NUMBER E493

PLOT DATE 03/15/04 4:43pm FILE= H:\30788\30788B\ELEC\e493 by BUSK XREF=30788b\misc\30788tb,