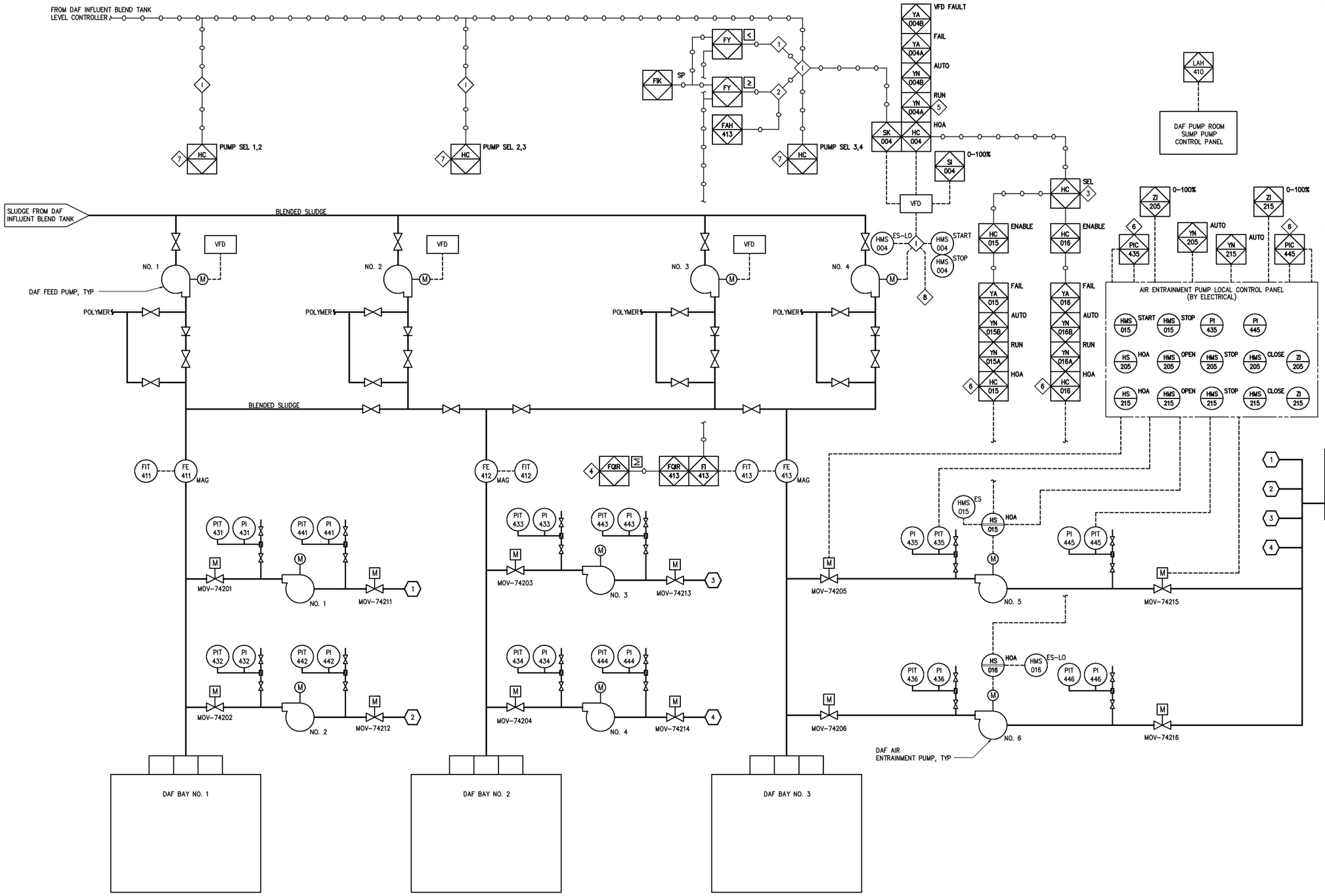

NOTES:

1 ALL DAF THICKENER TAG NUMBERS ARE PRECEDED BY '74'.

INTERLOCK LEGEND:

1 IF THE ACTUAL DAF FLOW IS LESS THAN THE MAX ALLOWABLE FLOW SETPOINT, PUMP SPEED SHALL BE CONTROLLED TO MAINTAIN A CONSTANT LEVEL IN THE DAF BLEND TANK.

2 IF THE ACTUAL DAF FLOW IS GREATER THAN OR EQUAL TO THE MAX ALLOWABLE FLOW SETPOINT, PUMP SPEED SHALL REMAIN CONSTANT REGARDLESS OF THE LEVEL IN THE DAF BLEND TANK.

3 OPERATOR SHALL BE ABLE TO SELECT EITHER, OR BOTH PUMPS FOR DUTY SERVICE WITH A SPECIFIC DAF FEED PUMP.

4 PLC SHALL MONITOR AND TOTALIZE THE SUM OF ALL DAF INFLUENT FLOWS.

5 LIQUID POLYMER MAKE-UP SYSTEM SHALL BE ENABLED WHEN DAF FEED PUMP IS RUNNING.

6 REFER TO SPECIFICATIONS FOR DETAILS OF AEP AUTO START AND STOP SEQUENCES AND OPERATION.

7 SELECT PUMP FOR DUTY WITH ASSOCIATED DAF UNIT.

8 SHUT DOWN FEED PUMP UPON LOW LEVEL IN DAF INFLUENT BLEND TANK. REFER TO I-740.

NO.	ISSUED FOR	DATE	BY
3	AS BUILT	OCT 2007	RLT
2	CONSTRUCTION	MAR 2004	RLT
1	REGULATORY APPROVAL	NOV 2003	RLT

DESIGNED DBE
DRAWN JAD
CHECKED
PROJ. ENGR. DAN
APPROVED

THIS DOCUMENT ORIGINALLY ISSUED FOR CONSTRUCTION AND SEALED BY ROBERT S. DIFIORE, SEAL NO. 22769

THIS DOCUMENT ORIGINALLY ISSUED FOR CONSTRUCTION AND SEALED BY RONALD L. TAYLOR, SEAL NO. 024649

RECORD DRAWING

THIS DRAWING HAS BEEN MODIFIED TO REFLECT FIELD CHANGES REPORTED BY THE CONTRACTOR OR ANOTHER PARTY, BUT NOT VERIFIED BY THE CERTIFYING ENGINEER. THIS DOCUMENT ORIGINALLY ISSUED AND SEALED BY DANIEL B. EDWARDS, SEAL NUMBER 024960. THIS MEDIA SHALL NOT BE CONSIDERED A CERTIFIED DOCUMENT.

HAZEN AND SAWYER
Environmental Engineers & Scientists
4011 WestChase Blvd, Raleigh, North Carolina 27607

CITY OF ROANOKE
VIRGINIA

REGIONAL WATER POLLUTION CONTROL PLANT
PROCESS TRAIN IMPROVEMENTS

INSTRUMENTATION AND CONTROL
DAF THICKENERS
PROCESS AND INSTRUMENTATION DIAGRAM

THE SCALE BAR SHOWN BELOW MEASURES ONE INCH LONG ON THE ORIGINAL DRAWING.

DATE MARCH 2004
H & S JOB NUMBER 30788B
CONTRACT NUMBER B
DRAWING NUMBER I741

PLOT DATE 03/09/03 2:26pm FILE= H:\30788\INST\I740 by PLAMANSON XREF=MISC\30788Rb.