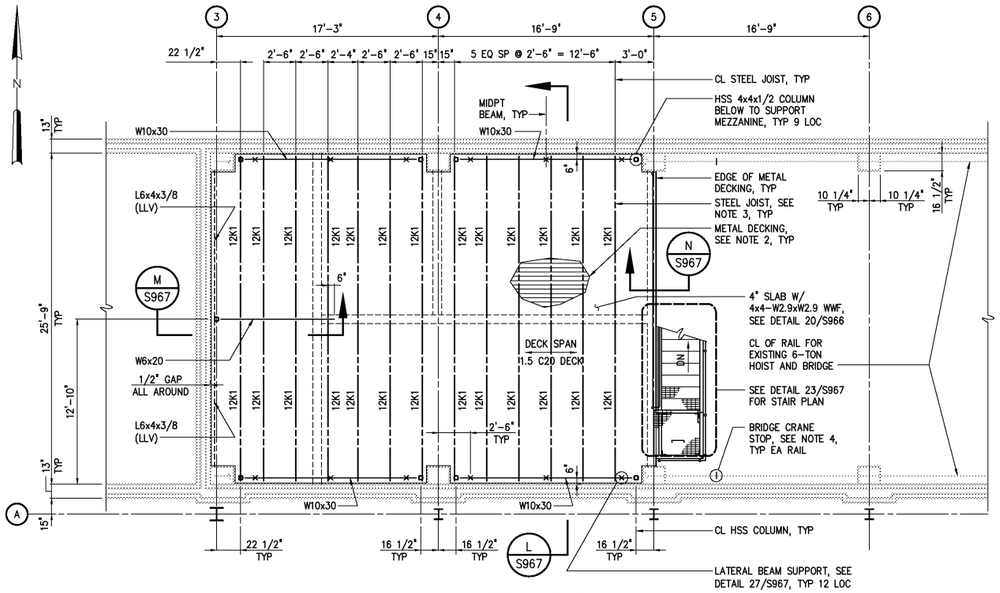

MEZZANINE PLAN

3/16"=1'-0"

TOS EL 919.04
TOP OF JOIST EL 919.25

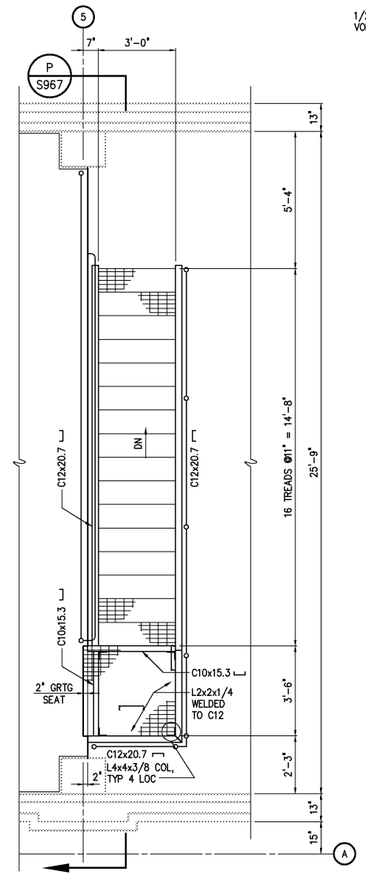

STAIR PLAN

DETAIL 23 / 3/8"=1'-0" / S961

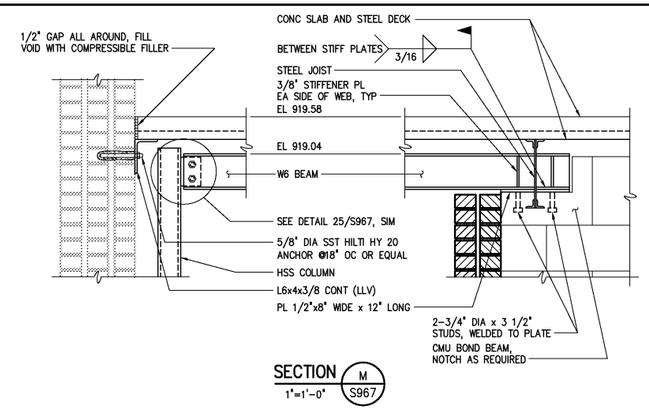

SECTION M / S967
1"=1'-0"

NOTES:

1. ALL EXISTING DIMENSIONS AND ELEVATIONS TO BE FIELD VERIFIED.
2. MEZZANINE DECK PUDDLE WELD PATTERN SHALL BE 36/4 WITH 3 WELDED CONNECTIONS EQUALLY SPACED AT SIDE LAPS PER SPAN.
3. STEEL JOISTS SHALL BE FABRICATED IN ACCORDANCE WITH SPECIFICATION SECTION 05210. SEE DETAIL 19/S966 FOR JOIST CONNECTION TO STEEL BEAM. SEE JOIST LOADING SCHEDULE ON DRAWING S962 FOR JOIST DESIGN LOADS.
4. CONTRACTOR SHALL SHOW PROVIDE BRIDGE CRANE STOPS TO PREVENT 6-TON BRIDGE CRANE FROM INTERFERING WITH NEW MEZZANINE AND STAIRS. IF APPROVED BY THE ENGINEER, CONTRACTOR SHALL BE PERMITTED TO RELOCATE EXISTING STOPS AT WEST END OF EACH RAIL TO APPROXIMATE LOCATION SHOWN ON THE DRAWINGS.

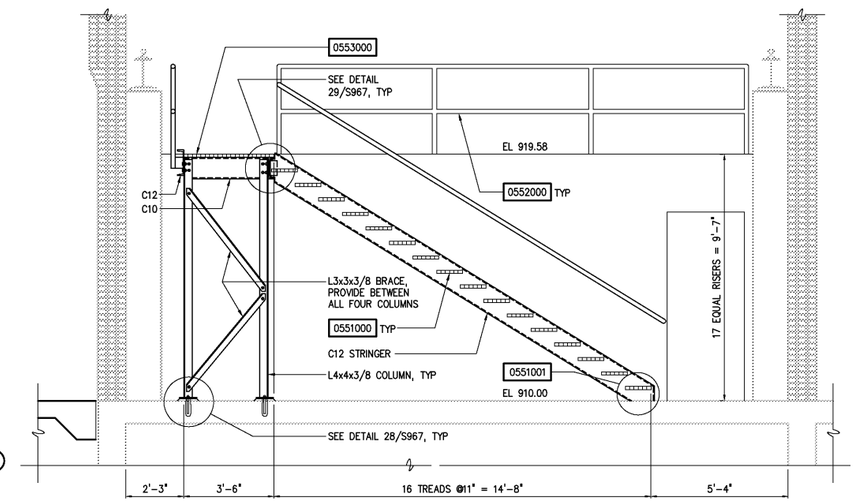

SECTION P / S967
3/8"=1'-0"

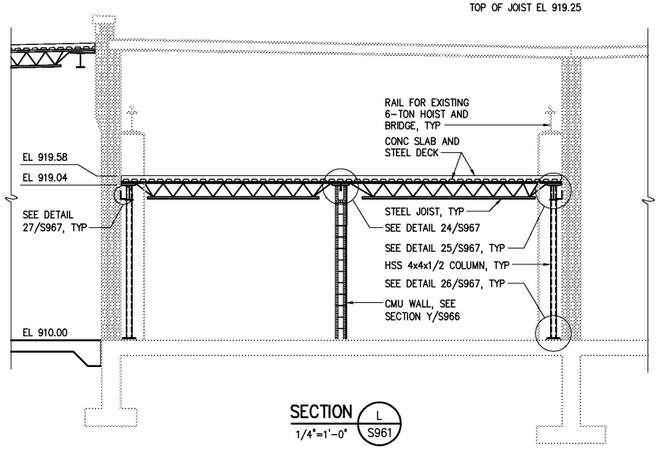

SECTION L / S961
1/4"=1'-0"

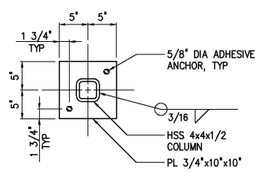

DETAIL 26 / 1"=1'-0" / S967

NOTE: PROVIDE 1" NONSHRINK GROUT BENEATH BOTTOM OF BASE PLATE

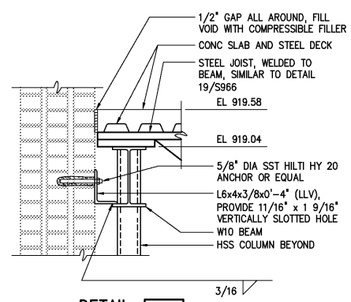

DETAIL 27 / 1"=1'-0" / S967

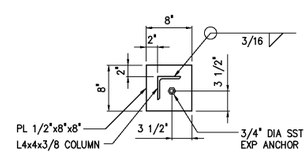

NOTE: PROVIDE 1" NONSHRINK GROUT BENEATH BOTTOM OF BASE PLATE

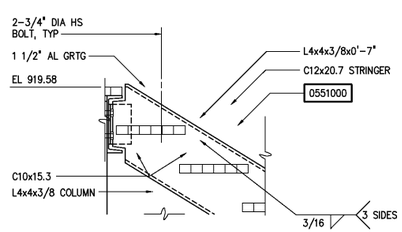

DETAIL 29 / 1"=1'-0" / S967

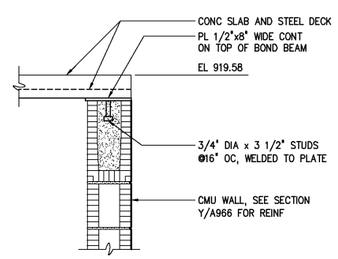

SECTION N / S967
1"=1'-0"

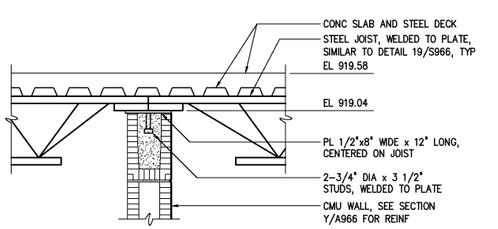

DETAIL 24 / 1"=1'-0" / S967

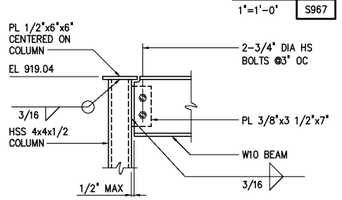

DETAIL 25 / 1"=1'-0" / S967

NOTE: STEEL JOISTS, STEEL DECKING AND CONC SLAB NOT SHOWN

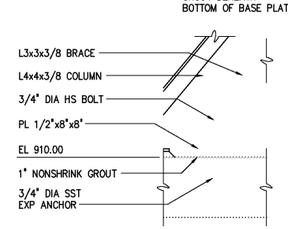

DETAIL 28 / 1"=1'-0" / S967

NO.	ISSUED FOR	DATE	BY
3	RECORD DRAWING	JAN 2006	RLT
2	CONSTRUCTION	JAN 2004	RLT
1	REGULATORY APPROVAL	NOV 2003	RLT

DESIGNED WGL
DRAWN WGL
CHECKED
PROJ. ENGR. DAN
APPROVED

THIS DOCUMENT ORIGINALLY ISSUED FOR CONSTRUCTION AND SEALED BY ROBERT S. DIFIORE, SEAL NO. 22769

THIS DOCUMENT ORIGINALLY ISSUED FOR CONSTRUCTION AND SEALED BY RONALD L. TAYLOR, SEAL NO. 024649

RECORD DRAWING

THIS DRAWING HAS BEEN MODIFIED TO REFLECT FIELD CHANGES REPORTED BY THE CONTRACTOR OR ANOTHER PARTY, BUT NOT VERIFIED BY THE CERTIFYING ENGINEER. THIS DOCUMENT ORIGINALLY ISSUED AND SEALED BY CHRISTOPHER T. PHILLIPS, 033796. THIS MEDIA SHALL NOT BE CONSIDERED A CERTIFIED DOCUMENT.

HAZEN AND SAWYER
Environmental Engineers & Scientists
4011 WestChase Blvd, Raleigh, North Carolina 27607

CITY OF ROANOKE
VIRGINIA

REGIONAL WATER POLLUTION CONTROL PLANT
PROCESS TRAIN IMPROVEMENTS

MAINTENANCE BUILDING MODIFICATIONS
STRUCTURAL
PLANS, SECTIONS AND DETAILS

THE SCALE BAR SHOWN BELOW MEASURES ONE INCH LONG ON THE ORIGINAL DRAWING.

DATE JANUARY 2004
H & S JOB NUMBER 30788C
CONTRACT NUMBER C
DRAWING NUMBER S967

PLOT DATE 01/11/06 2:05pm FILE= H:\30788\30788C\STRU\s967r by RBATCHELOR XREF=30788c\ymlsc\30788tb, 960\mb-o-pm, 960\mb-pm-s, 960\mb-pb-s, 960\mb-o-s07, 960\mb-s-st1, 960\mb-s-df, 960\mb-s-dg, 960\mb-s-dh,