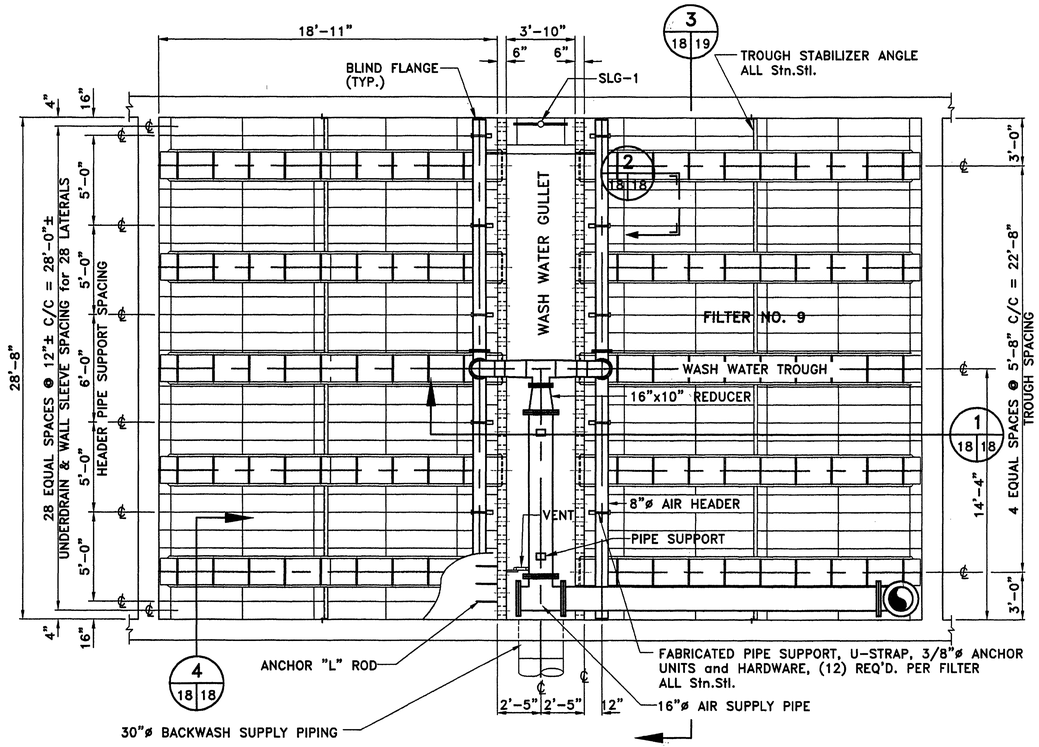

NOTE: FILTER NO. 10 IS OPPOSITE HAND

PLAN VIEW
SCALE: 1/4"=1'-0"

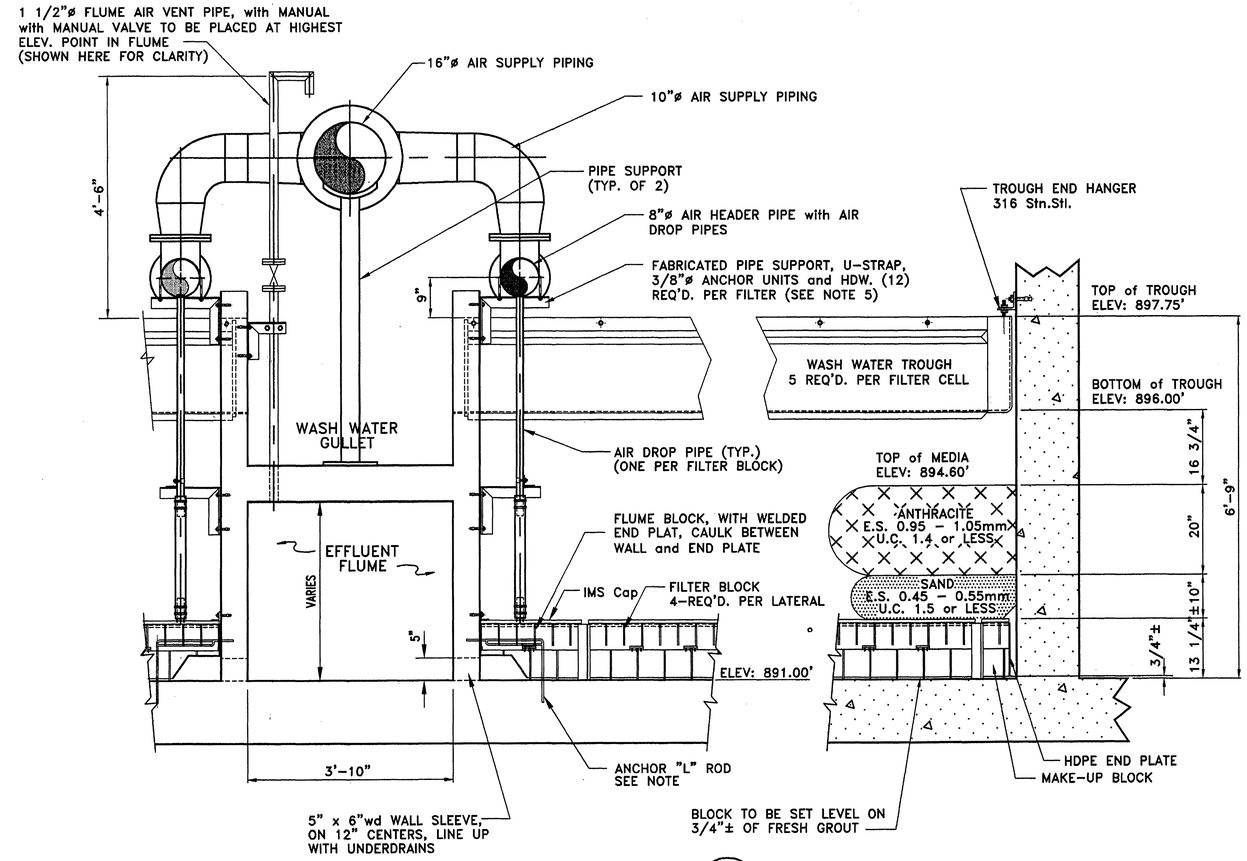

SECTION 1 (18 | 18)
SCALE: 3/4"= 1'-0"

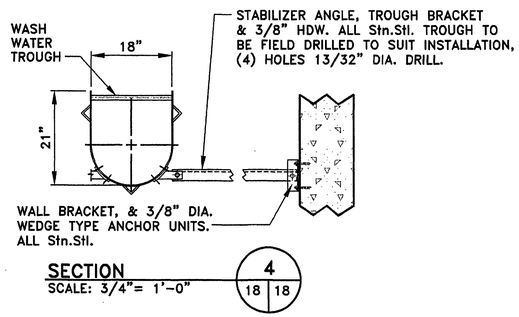

SECTION 4 (18 | 18)
SCALE: 3/4"= 1'-0"

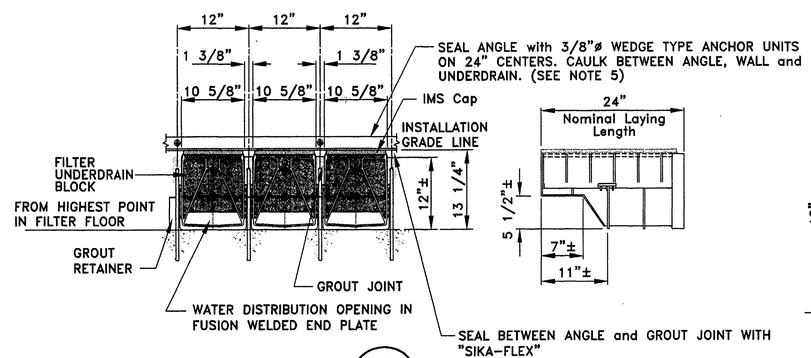

SECTION 2 (18 | 18)
SCALE: 1"= 1'-0"

L-Type Flume Block

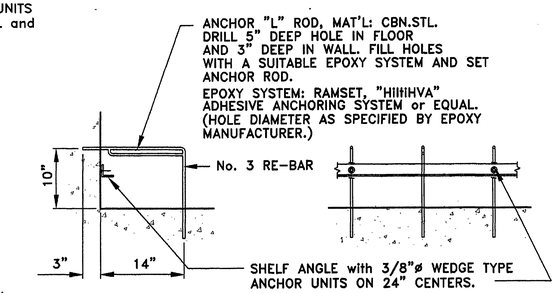

NOTES:

1. FILTER DESIGN BASED ON THE FOLLOWING FLOW RATES:
   HIGH RATE BACKWASH - 20 GPM/SQ.FT.
   AIR SCOUR - 4.5 SCFM/SQ.FT.
   CONCURRENT AIR/WATER - 4.5 SCFM/5 GPM PER SQ.FT.
2. AIR PRESSURE REQUIRED AT AIR HEADER INLET, (INCLUDES AIR HEADER, UNDERDRAIN & STATIC HEAD of WATER): 5.5 PSI
3. BLOWER REQUIREMENT 4700 SCFM
4. FILTER BLOCK TO BE STRUCTURAL HDPE AND SHALL BE NSF APPROVED.
5. ALL MOUNTING BRACKETS TO BE STAINLESS STEEL, TYPE 304 AND ALL HARDWARE TO BE STAINLESS STEEL, TYPE 18-8.
6. TROUGH IS DESIGNED FOR A MAXIMUM CARRY-OFF CAPACITY OF 2091 G.P.M. WITH 2" OF FREEBOARD.
7. WASH TROUGHS TO BE FIBERGLASS REINFORCED POLYESTER RESIN, COLOR: BLUE-GREEN (LEO-LITE #87) GENERAL PURPOSE RESIN. ALL CUT EDGES TO BE RESIN SEALED.

COMMONWEALTH OF VIRGINIA
STEWART W. HUBBELL
NO. 07420
PROFESSIONAL ENGINEER

Mattern & Craig, Inc.
CONSULTING ENGINEERS • SURVEYORS
701 FIRST STREET, S.W.
ROANOKE, VIRGINIA 24016
(540) 343-4843
(540) 343-7691 FAX

REVISIONS

NO.	BY	DATE	REMARKS
1	ARB	JAN. 2000	RECORD DRAWING

DES BCC
DWN LDL,ARB
CKD SWH

ROANOKE VIRGINIA, CHARTERED 1882

CITY OF ROANOKE, VIRGINIA
WATER POLLUTION CONTROL PLANT UPGRADE AND EXPANSION

EFFLUENT FILTERS

DETAILS
AS SHOWN

DATE MAY, 1997
M SHEET 18 OF 30
CAD REF. NO. M18.DWG