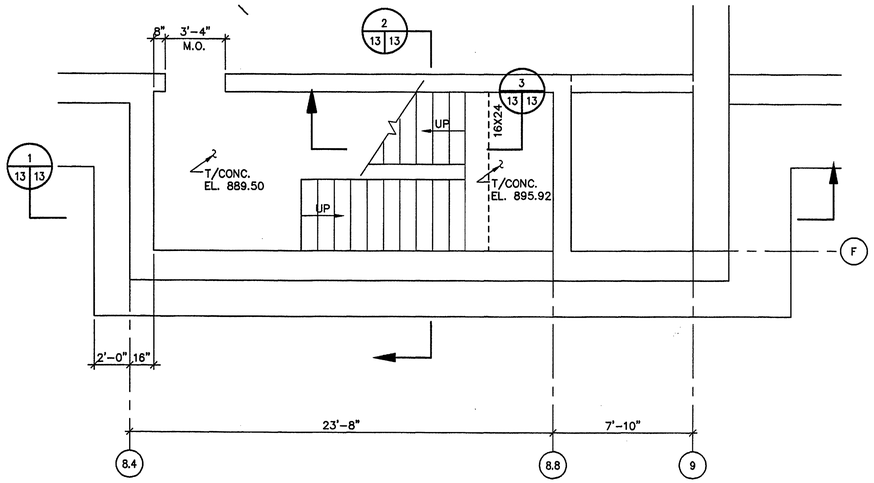

PARTIAL FOUNDATION PLAN

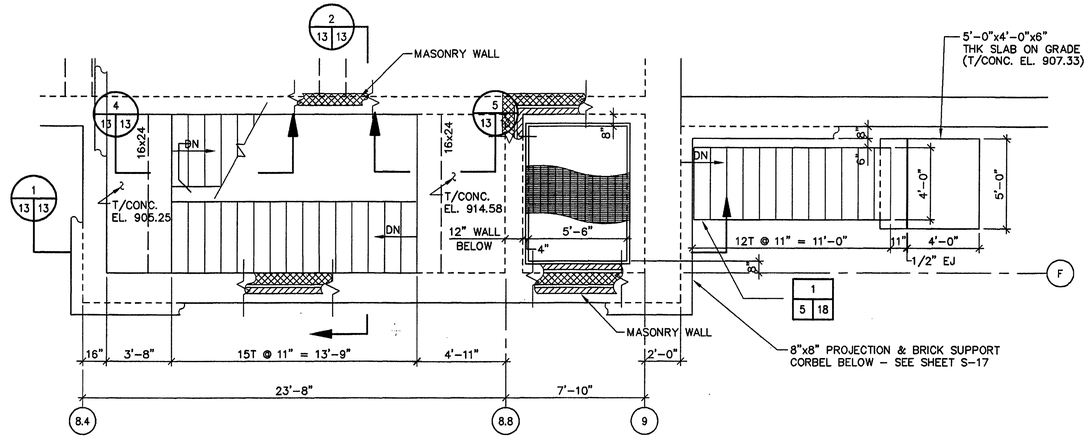

PARTIAL TOP PLAN

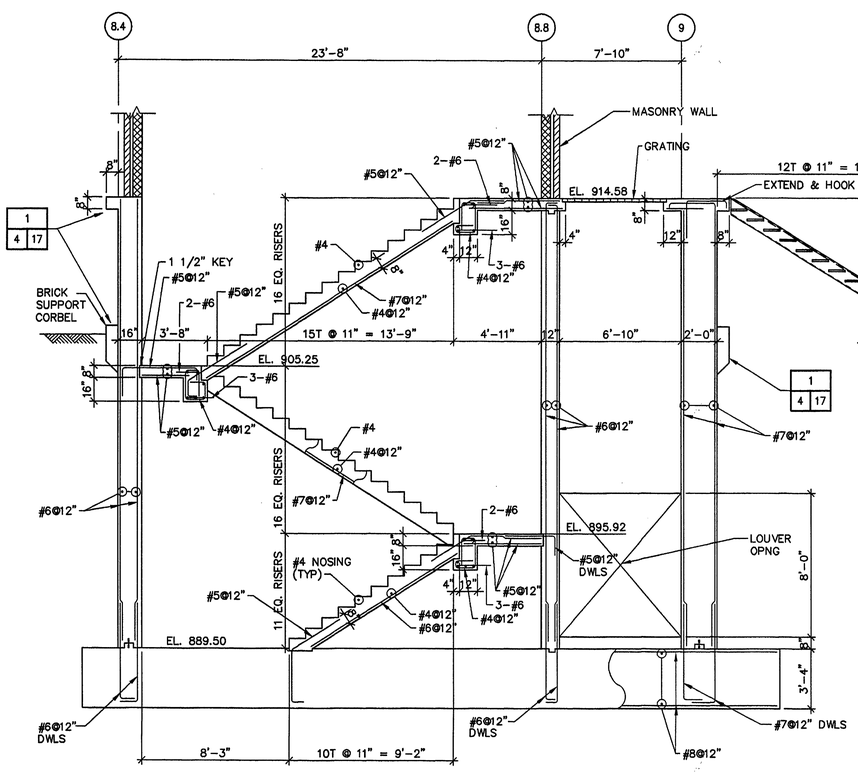

SECTION 1 / 13 13

1/4" = 1'-0"

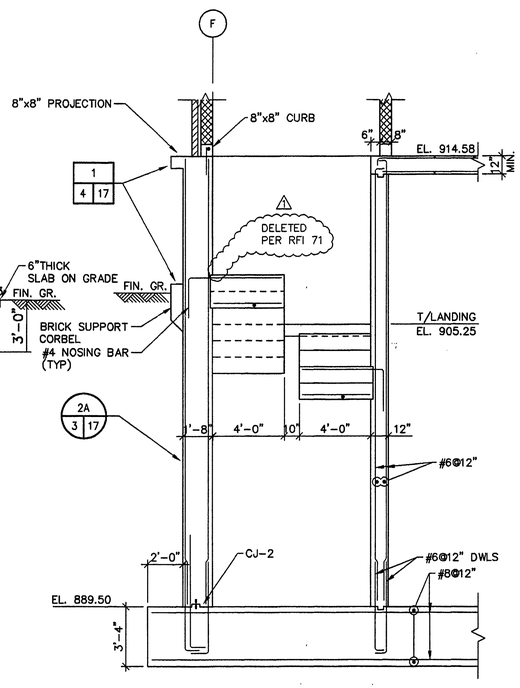

SECTION 2 / 13 13

1/4" = 1'-0"

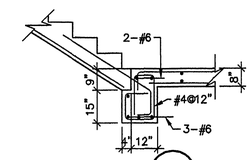

SECTION 3 / 13 13

3/8" = 1'-0"

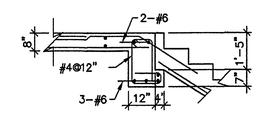

SECTION 4 / 13 13

3/8" = 1'-0"

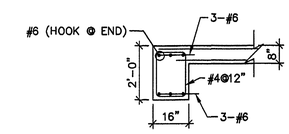

SECTION 5 / 13 13

3/8" = 1'-0"

GENERAL NOTE:

NOT ALL BAF EQUIPMENT, PIPING, VALVES AND APPURTENANCES ARE SHOWN. SEE SPECIFICATIONS AND BAF MANUFACTURER'S SHOP DRAWINGS FOR ADDITIONAL ITEMS AND SCOPE OF EQUIPMENT, PIPING, VALVES AND APPURTENANCES SUPPLIED TO THE CONTRACTOR BY THE BAF MANUFACTURER.

MALCOLM PIRNIE
11832 Rock Landing Drive, Suite 400
Newport News, Virginia 23606

REVISIONS

NO.	BY	DATE	REMARKS
1	ARB	JAN. 2000	RECORD DRAWING

DES MZ
DWN DRK
CKD DB

ROANOKE
VIRGINIA, CHARTERED 1882

CITY OF ROANOKE, VIRGINIA
WATER POLLUTION CONTROL PLANT UPGRADE AND EXPANSION

BIOLOGICAL AERATED FILTER
PART. PLANS AND SECTIONS

1/4" = 1'-0"

COPYRIGHT © 1997
MALCOLM PIRNIE, INC.

DATE MAY 1997

S SHEET 13 OF 44

CAD REF. NO. 0060S364

4445 0060028505 I:\ACAD\PROJ\0060028S\0060S364 Scale: 1:11 Date: 05/06/1997 Time: 07:31