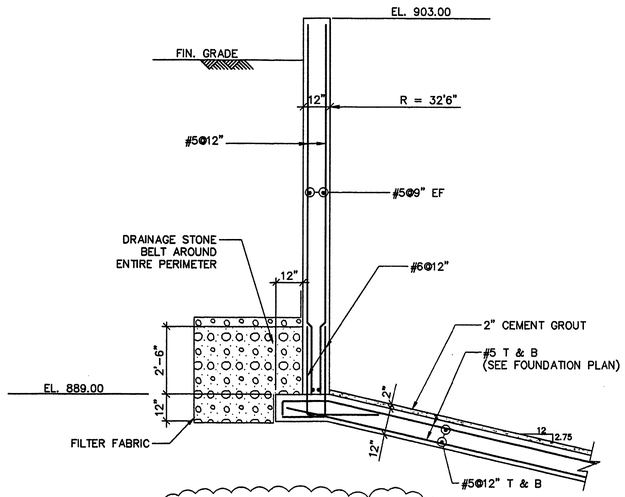

TYPICAL WALL SECTION

SECTION 1 / 33 34

SCALE: 3/8"=1'-0"

REVISE PER RFI 124

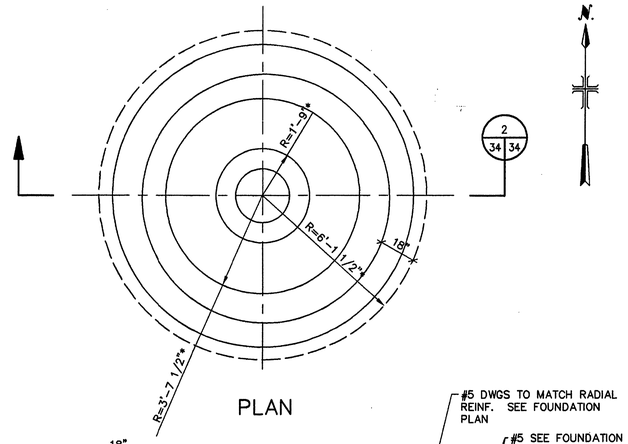

PLAN

2 / 34 34

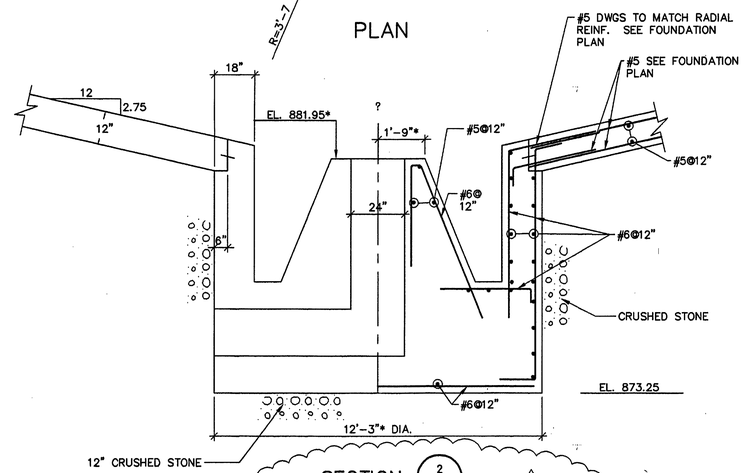

SECTION 2 / 34 34

REVISE PER RFI 114 & 115

SCALE: 3/8"=1'-0"

DRIVE UNIT SUPPORT DETAIL 1 / 33 34

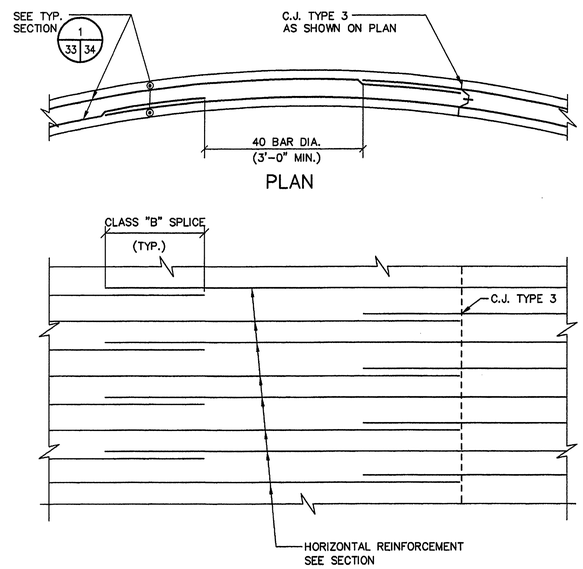

NOTES: 1. SPLICES OF WALL REINFORCEMENT SHALL BE STAGGERED (SEE ELEVATION) SO THAT LESS THAN HALF OF REINF. IS SPLICED WITHIN A LENGTH OF "B" LAP.
2. MIN. LENGTH OF LAPS FOR SPLICES SHALL BE AS GIVEN IN THE TABLE FOR TYPE "B" LAPS.

TYPICAL CIRCULAR WALL REINFORCEMENT SPLICE DETAIL

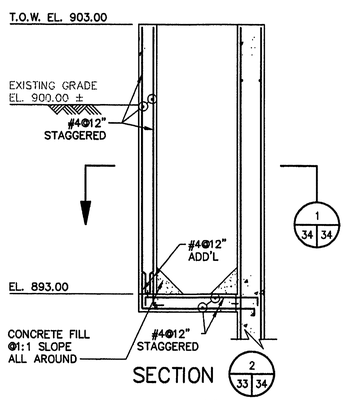

1 / 34 34

SECTION 2 / 33 34

SCALE: 3/8" = 1'-0"

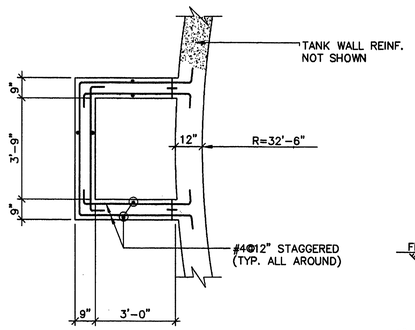

SECTION 1 / 34 34

SCALE: 3/8"=1'-0"

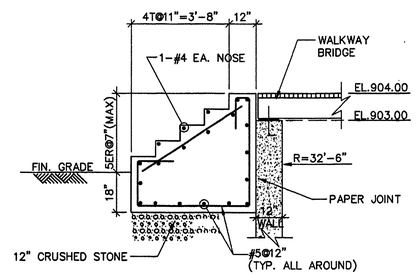

SECTION 3 / 33 34

SCALE: 3/8"-1'-0"

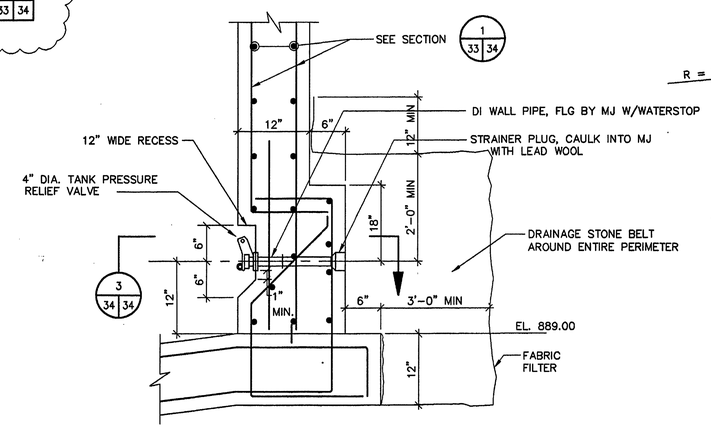

TYPICAL PRESSURE RELIEF VALVE DETAIL 2 / 33 34
(NOT TO SCALE)

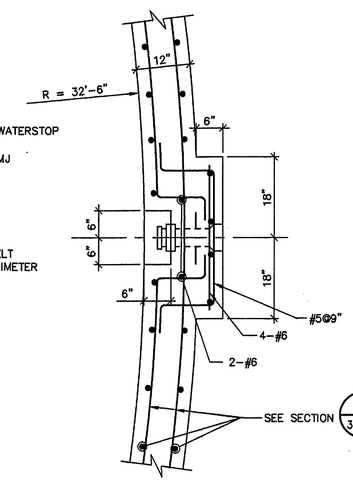

SECTION 3 / 34 34

SCALE: 3/4" = 1'0"

4873 0060028592 I:\ACAD\PROJ\00600285\0060S372 Scale: 1:32 Date: 05/01/1997 Time: 08:42

MALCOLM PIRNIE
11832 Rock Landing Drive, Suite 400
Newport News, Virginia 23606

REVISIONS

NO.	BY	DATE	REMARKS
1	ARB	JAN. 2000	RECORD DRAWING

DES FDC
DWN FDC
CKD HLC

ROANOKE VIRGINIA, CHARTERED 1882

CITY OF ROANOKE, VIRGINIA
WATER POLLUTION CONTROL PLANT UPGRADE AND EXPANSION

GRAVITY THICKENER

SECTIONS AND DETAILS

SCALE AS NOTED

COPYRIGHT © 1997 MALCOLM PIRNIE, INC.

DATE MAY 1997

S SHEET 34 OF 44

CAD REF. NO. 0060S372