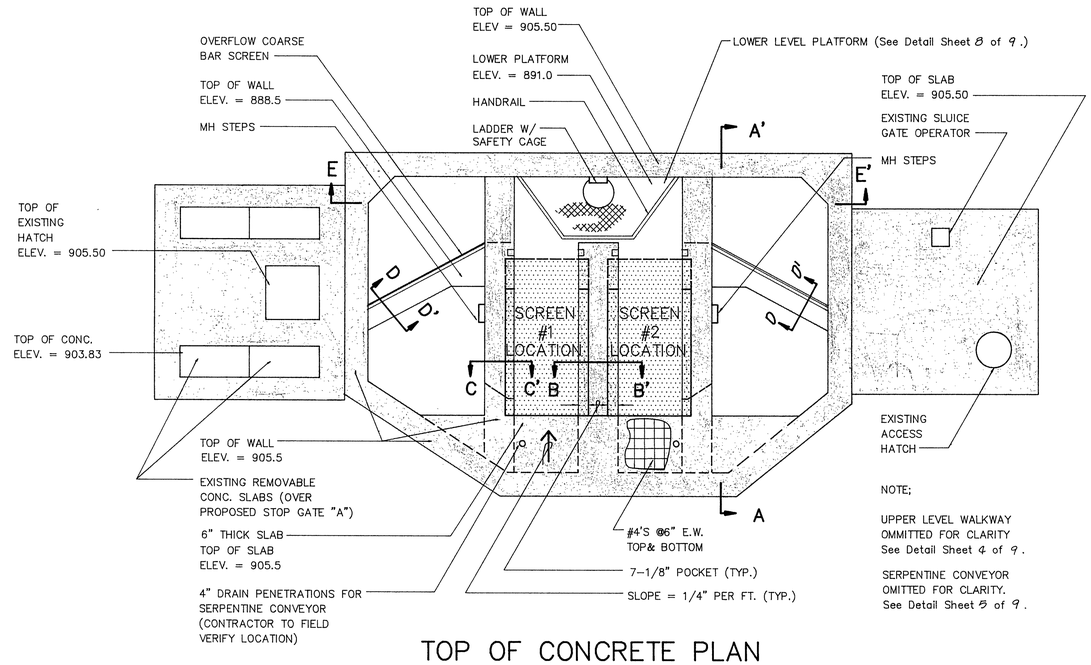

NOTE;

UPPER LEVEL WALKWAY OMMITTED FOR CLARITY See Detail Sheet 4 of 9.

SERPENTINE CONVEYOR OMITTED FOR CLARITY. See Detail Sheet 5 of 9.

TOP OF CONCRETE PLAN

Scale: 1/4" = 1'-0"

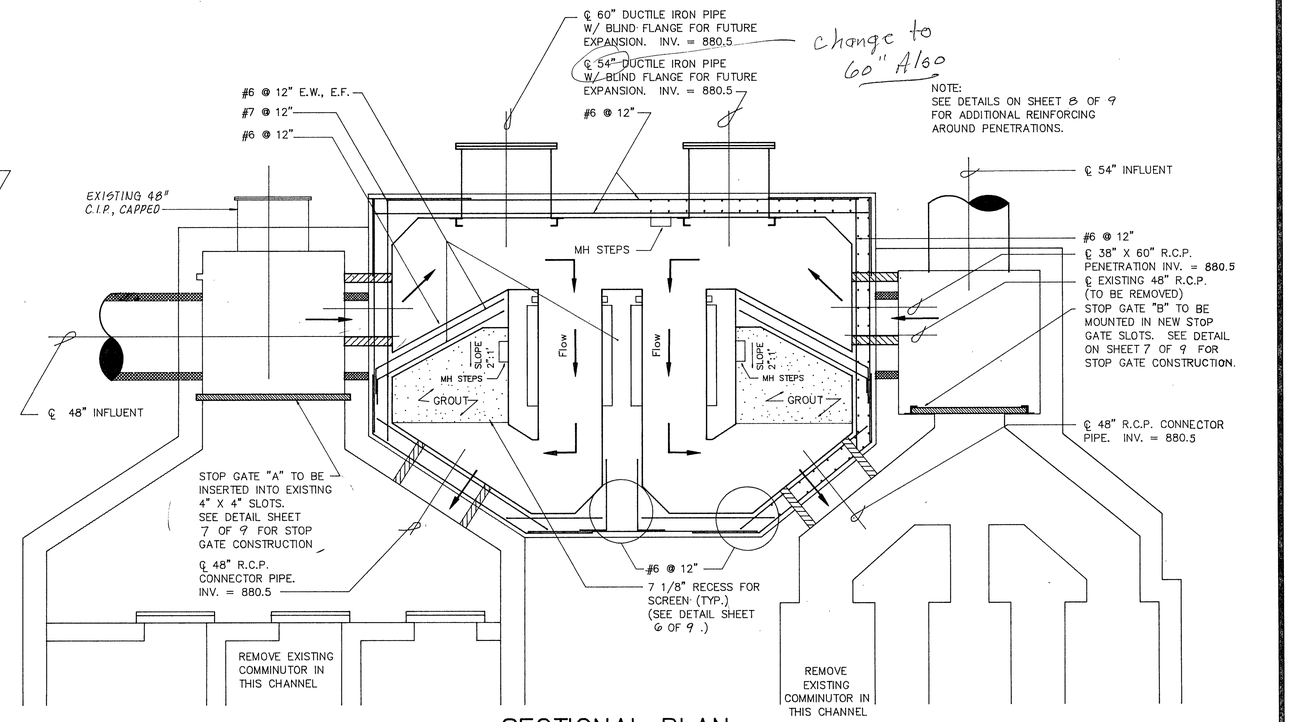

SECTIONAL PLAN

Scale: 1/4" = 1'-0"

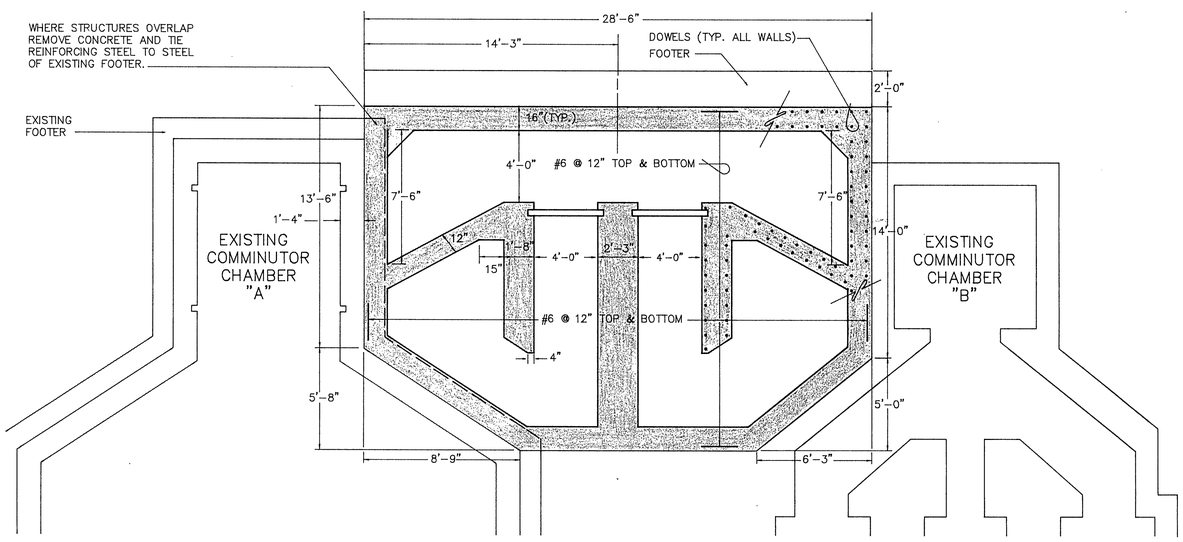

FOUNDATION PLAN

Scale: 1/4" = 1'-0"

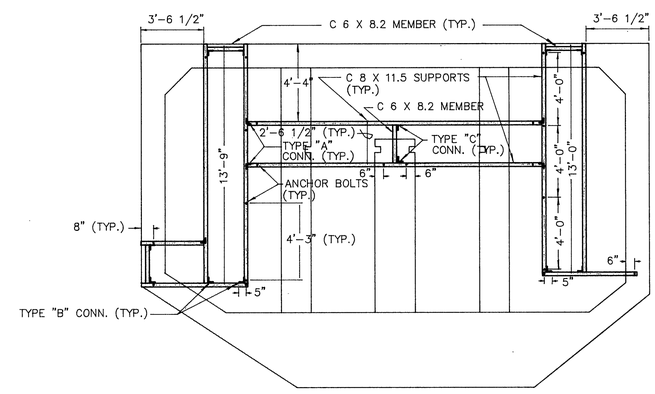

UPPER LEVEL WALKWAY SUPPORT AND ANCHOR BOLT LAYOUT

Scale: 1/4" = 1'-0"

CLEAN WATER ENGINEERS, INC.

P.O. BOX 218
FINCASTLE, VIRGINIA 24090

P.O. BOX 3225
STAUNTON VIRGINIA, 24401

HEADWORKS IMPROVEMENTS
FOR
ROANOKE CITY
WASTEWATER TREATMENT FACILITY
ROANOKE, VIRGINIA

COMMONWEALTH OF VIRGINIA
DAVID J. RIGBY
No. 8169
CERTIFIED PROFESSIONAL ENGINEER

REVISIONS		
NO.	DATE	BY

DESIGNED: CES	SHEET: 3 OF 8
DRAWN: CCB	SCALE: 1/4" = 1'-0"
CHECKED: WEP	DATE: NOV., 1987
APPROVED: DJR	PROJECT: F87025

131048