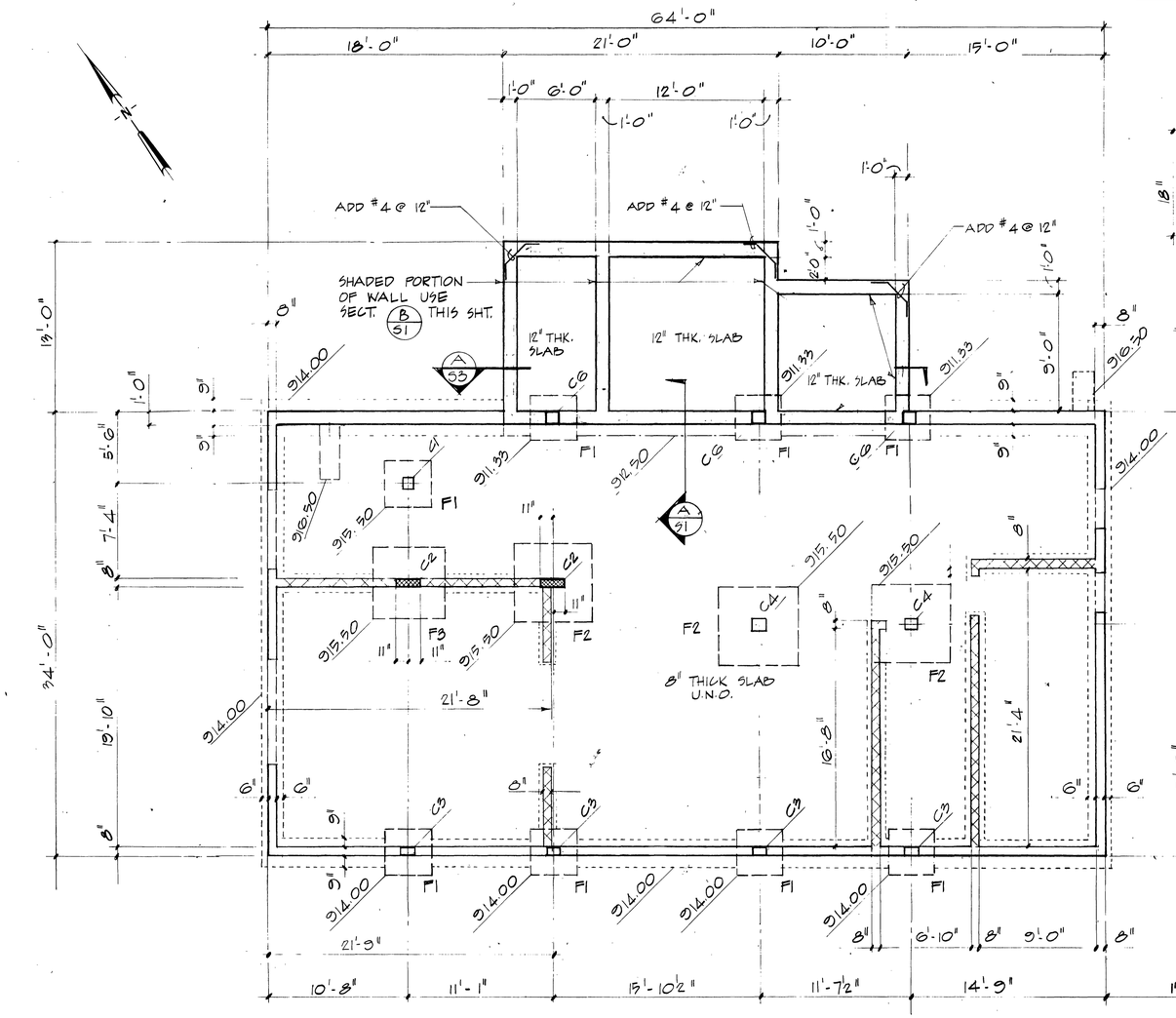

FOUNDATION AND LOWER LEVEL PLAN SCALE 3/16" = 1'-0"

NOTE: 1. FOR CURBS NOT SHOWN SEE ARCHITECTURAL PLANS FOR DIMENSIONS, LOCATION & REINFORCEMENT.

2. FOOTING ELEVATIONS NOTED ARE TOPS OF FOOTING UNLESS NOTED OTHERWISE.

3. FINISHED FLOOR ELEVATION 916.50 U.N.O.

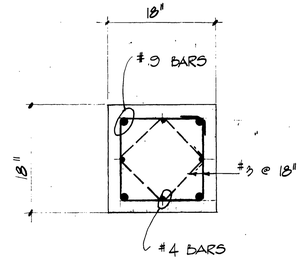

COL. C5 SECTION
SCALE 1" = 1'-0"

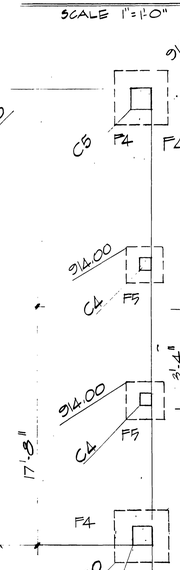

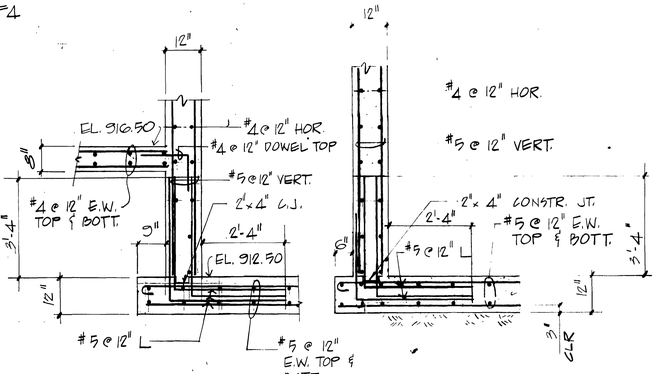

WALL SECT. A/S1
SCALE 1/2" = 1'-0"

WALL SECTION B/S1
SCALE 1/2" = 1'-0"

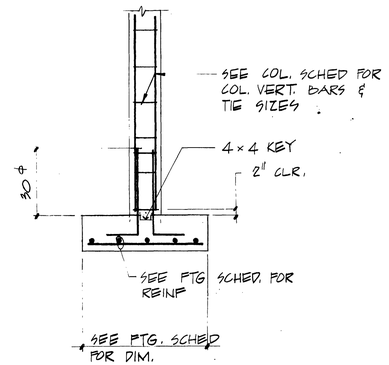

TYP. FOOTING & COL. DET.
SCALE 1/2" = 1'-0"

COLUMN SCHEDULE

COL. MARK	C1	C2	C3	C4	C5 *	C6
SIZE	10" SQUARE	22"x8 CMU	8"x 12"	10" SQUARE	18" SQUARE	12" SQUARE
VERT REINF	4-#6	4-#9	4-#6	4-#6	4-#9, 4-#4	4-#6
TIES	#3 @ 12"	NONE	#3 @ 12"	#3 @ 5"	#3 @ 9"	#3 @ 12"

* ONLY COL. C5 WILL CONTINUE UP TO ROOF. REST WILL STOP @ UPPER LEV FLR. SLAB

FOOTING SCHEDULE

FOOTING MARK	F1	F2	F3	F4	F5	
SIZE	3'-6" SQ.	6'-0" SQ.	5'-6" SQ.	4'-0" SQ.	2'-9" SQ.	
DEPTH	12"	14"	14"	12"	12"	
REINF	4-#5 E.W. BOT.	6-#5 E.W. BOT.	5-#5 E.W. BOT.	5-#5 E.W. BOT.	3-#5 E.W. BOT.	

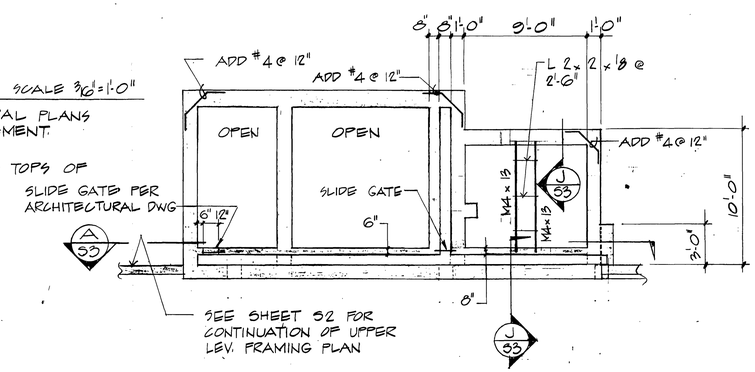

PARTIAL PLAN UPPER LEVEL
SCALE 3/16" = 1'-0"

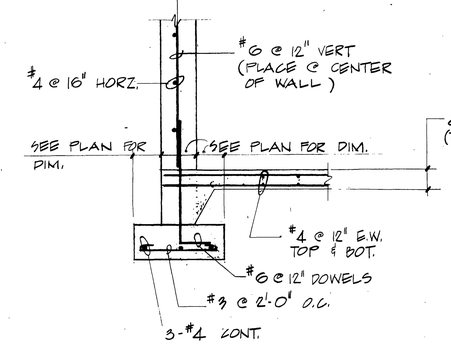

TYP. EXTERIOR WALL SECT.
SCALE 1/2" = 1'-0"

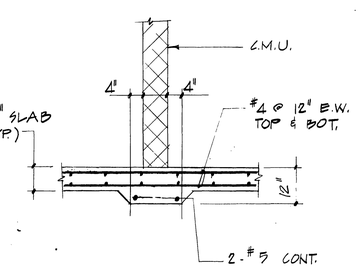

WALL FOOTING DET.
SCALE 1/2" = 1'-0"

No.	DATE	DESCRIPTION
2		
1		

REVISIONS

Dewberry & Davis
ENGINEERS ARCHITECTS PLANNERS SURVEYORS
8411 Arlington Boulevard Fairfax, Virginia 22030 Telephone 703-560-110
19201 Montgomery Village Ave. Gaithersburg, Md. 20760 Tele. 301-948-4120

PREPARED FOR
CITY OF ROANOKE
ROANOKE, VIRGINIA

CITY OF ROANOKE WASTEWATER TREATMENT PLANT
SLUDGE DEWATERING FACILITIES

FOUNDATION PLAN
SCHEDULE & DETAILS

SCALE: AS SHOWN
DATE: AUG. 1981
DESIGNED BY: W W
DRAFTED BY: CF

SHEET 22 OF 33

FILE NUMBER PP 2967