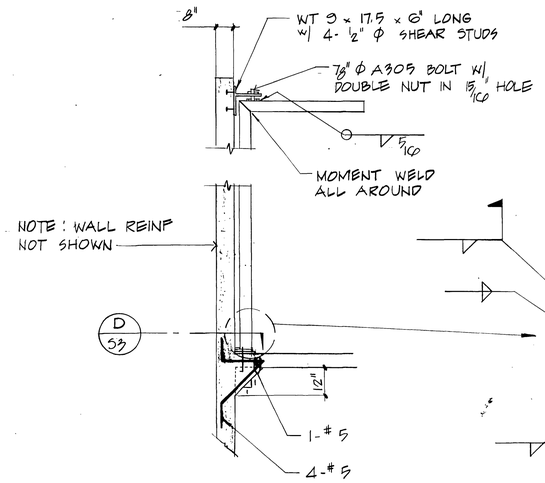

NOTE: HAUNCH LENGTH 1'-6" CENTERED @ SWING HOIST

SECTION
SCALE 3/8" = 1'-0"

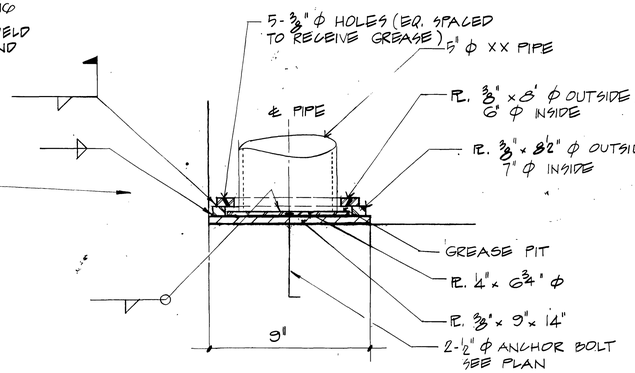

ELEVATION
SCALE 3" = 1'-0"

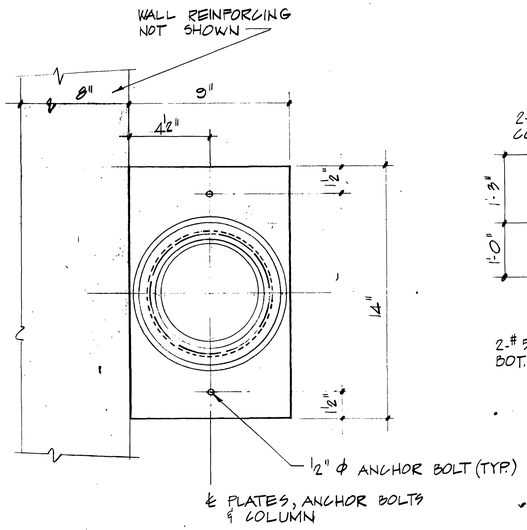

PLAN
SCALE 3" = 1'-0"
D 53

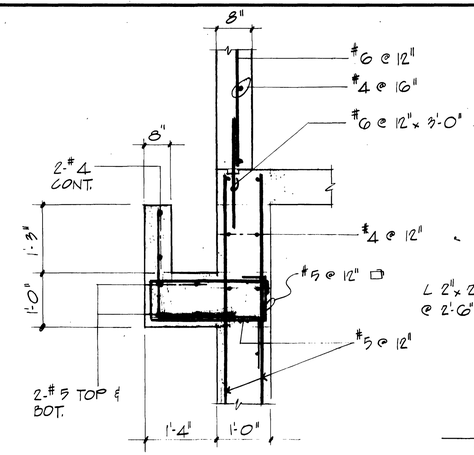

SECTION
SCALE 3/4" = 1'-0"
G 53

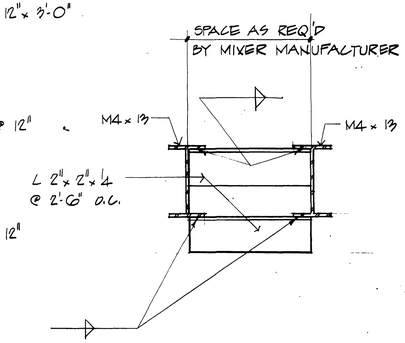

SECTION
SCALE 3/4" = 1'-0"
H 53

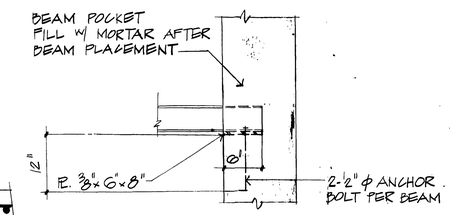

SECTION
SCALE 1" = 1'-0"
J 53

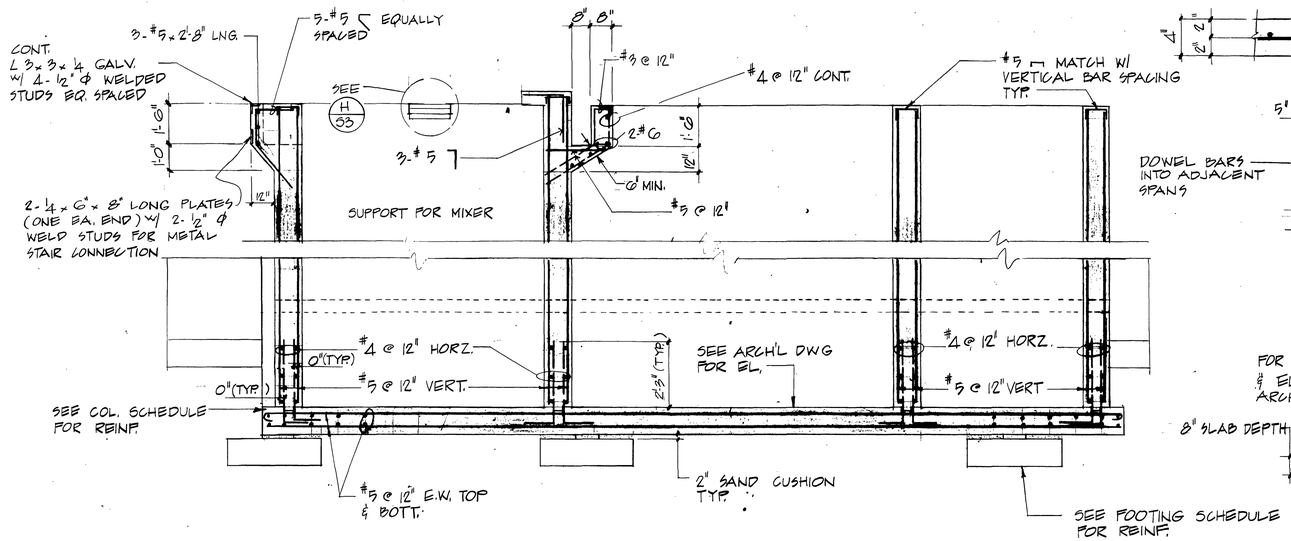

SECTION
SCALE 3/8" = 1'-0"
A 53

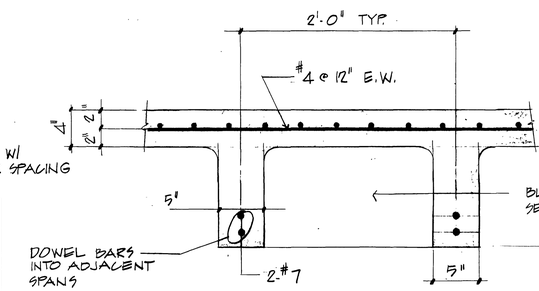

TYP. CONC. JOIST SECT.
SCALE 1/2" = 1'-0"
E 53

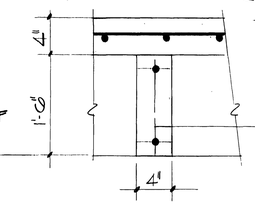

SECTION
SCALE 1 1/2" = 1'-0"
F 53

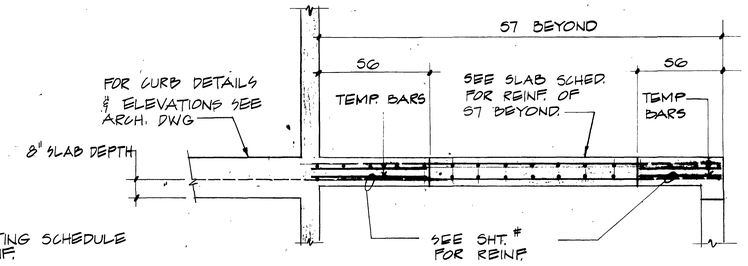

SLAB SECTION
SCALE 3/8" = 1'-0"
B 53

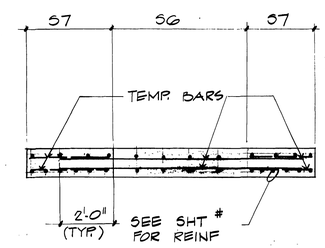

SLAB SECTION
SCALE 3/8" = 1'-0"
C 53

NO.	DATE	DESCRIPTION
2		
1		

REVISIONS

Dewberry & Davis
ENGINEERS ARCHITECTS PLANNERS SURVEYORS
8411 Arlington Boulevard Fairfax, Virginia 22030 Telephone 703·560·1100
19201 Montgomery Village Ave. Gaithersburg, Md. 20760 Tele. 301·948·4120

PREPARED FOR
CITY OF ROANOKE
ROANOKE, VIRGINIA

CITY OF ROANOKE WASTEWATER TREATMENT PLANT
SLUDGE DEWATERING FACILITIES

STRUCTURAL DETAILS

SCALE: AS SHOWN	SHEET 24 OF 33
DATE: AUG. 1981	
DESIGNED BY: WW	FILE NUMBER PP 2967
DRAFTED BY: CF	

N65235